# Spare parts book for Adly 50 RU

Updated januari 2007

**CYLINDER,CYLINDER HEAD**

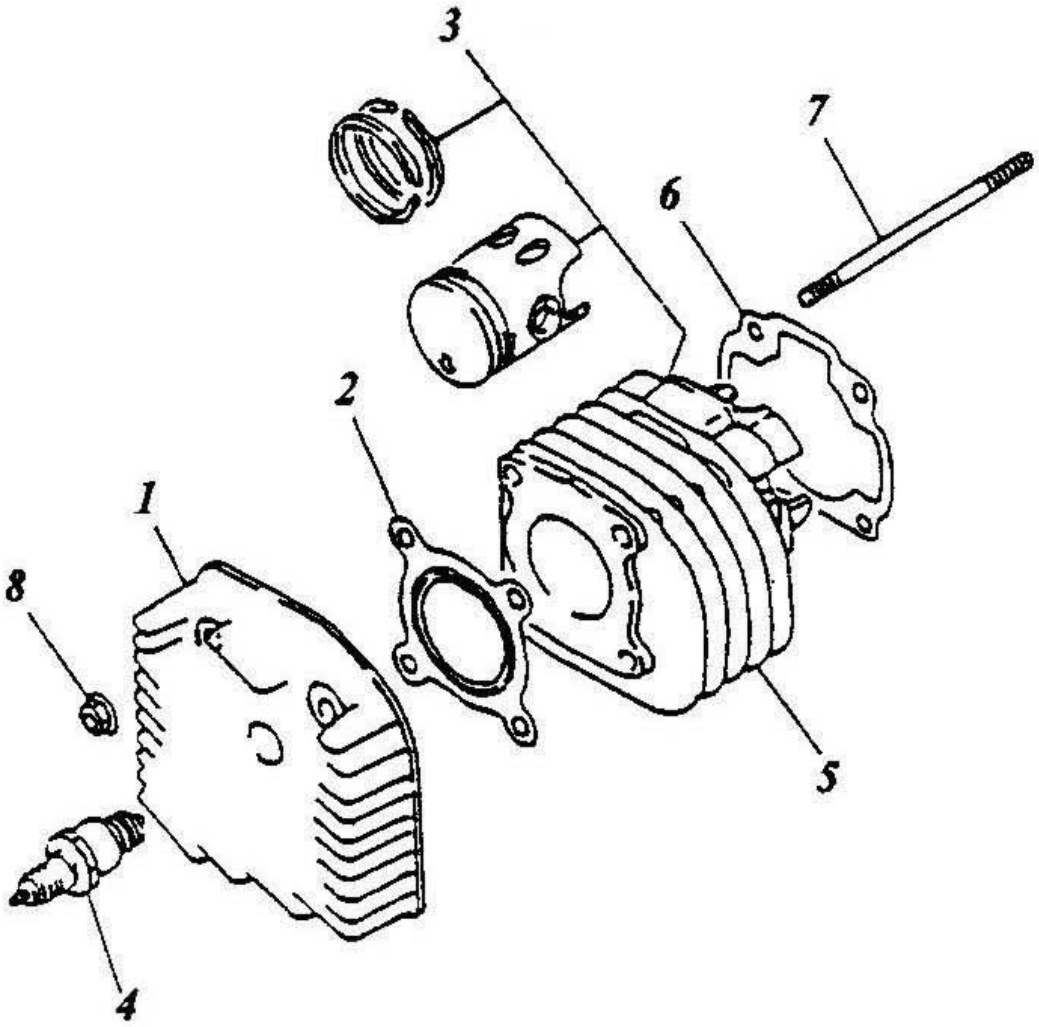

組件編號：237-01A　　汽缸,汽缸蓋 CYLINDER,CYLINDER HEAD

| Item No.<br>項次 | Parts No.<br>部品番號 | Unit Q'ty<br>用量 | Parts Name<br>零件名稱 | |
|---|---|---|---|---|
| 1 | 12201-116-000 | 1 | CYLINDER HEAD | |
| 2 | 12251-116-000 | 1 | CYLINDER HEAD GASKET | |
| 3 | 12301-116-000 | 1 | CYLINDER COMP | |
| 4 | 98076-101-00A | 1 | RESISTANCE SPARK PLUG | 抗電阻 |
| 5 | 12101-116-000 | 1 | CYLINDER | 無分級 |
| 6 | 12191-116-000 | 1 | CYLINDER GASKET | |
| 7 | 91001-07110 | 4 | STUD BOLT | 7*110 |
| 8 | 94050-07000 | 4 | HEX FLANGE NUT WITH SERRATION | 7MM |

**CRANKSHAFT,PISTON**

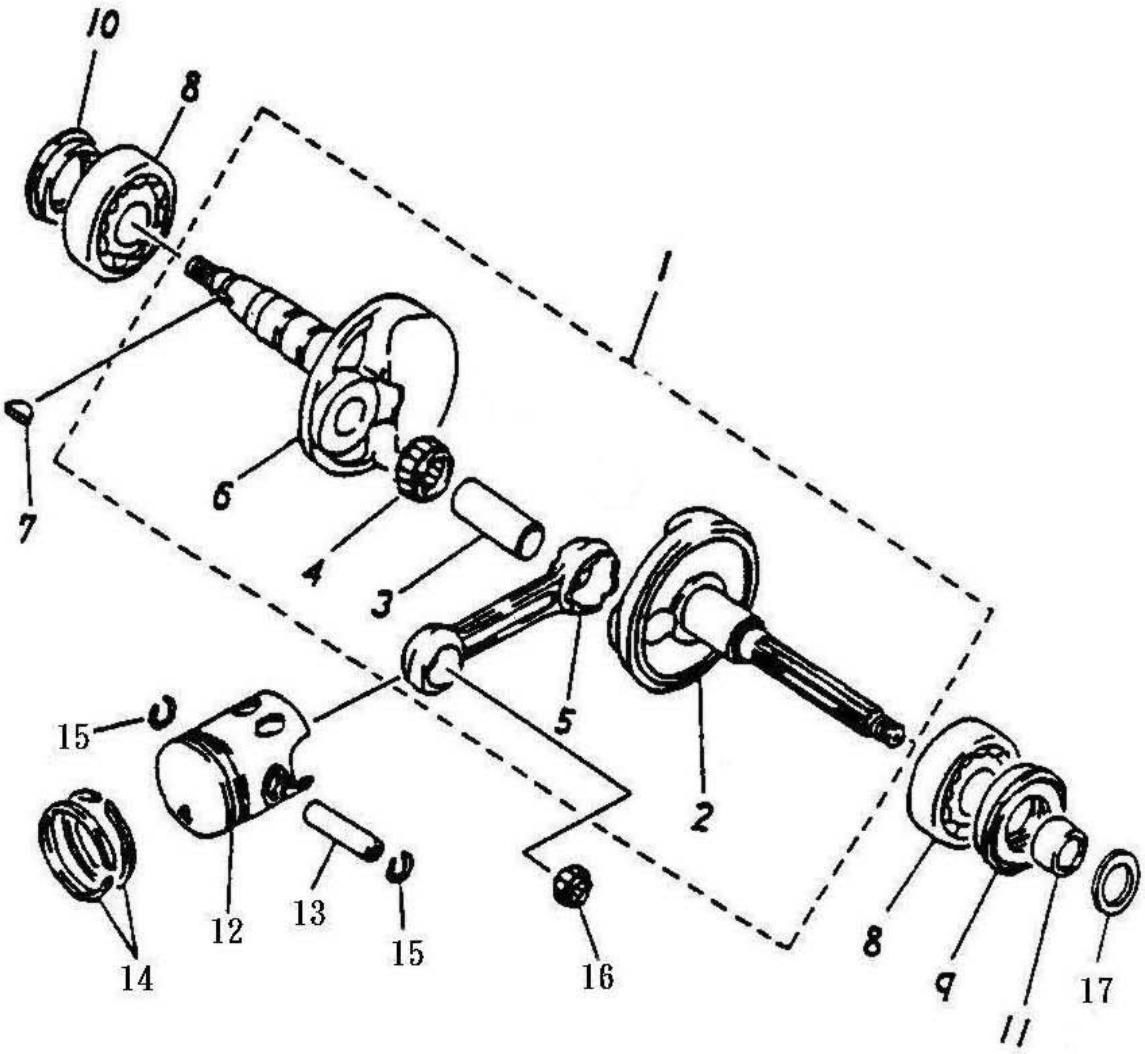

組件編號：237-02　　曲軸,活塞 CRANKSHAFT,PISTON

| Item No.<br>項次 | Parts No.<br>部品番號 | Unit Q'ty<br>用量 | Parts Name<br>零件名稱 | |
|---|---|---|---|---|
| 1 | 13000-116-000 | 1 | CRANKSHAFT ASS'Y | |
| 2 | 13321-116-000 | 1 | LEFT CRANK | |
| 3 | 13381-104-000 | 1 | CRANK PIN | |
| 4 | 96200-162212 | 1 | NEEDLE BEARING | 16*22*12 |
| 5 | 13201-104-000 | 1 | CRANK CONNECTING ROD | |
| 6 | 13311-116-000 | 1 | RIGHT CRANK | |
| 7 | 90471-104-000 | 1 | SEMICYCLE KEY | 3*13 |
| 8 | 96100-62040 | 2 | RADIAL BALL BEARING | 6204C3 |
| 9 | 96500-20428 | 1 | OIL SEAL | 20*42/43*8/9 |
| 10 | 96500-20306 | 1 | OIL SEAL | 20*30/33*6 |
| 11 | 13316-116-000 | 1 | LEFT CRANK COLLAR | 15*20*12 |
| 12 | 13100-116-000 | 1 | PISTON | 標準 |
| 13 | 13111-104-000 | 1 | PISTON PIN | 7*10*33 |
| 14 | 13011-116-000 | 1 | PISTON RING SET | STD |
| 15 | 13115-104-000 | 2 | PISTON PIN CLIP | 1.0*12 |
| 16 | 96200-101412 | 1 | NEEDLE BEARING | 10*14*12.5 |
| 17 | 94101-1319005 | 1 | PLAIN WASHER | 13*19*0.5 |
| 18 | 94512-4300R | 1 | INTERNAL CIR CLIP | RTW-43 |
| 19 | 13012-116-000 | 1 | INNER RING | |

**FAN,AIR SHROUD**

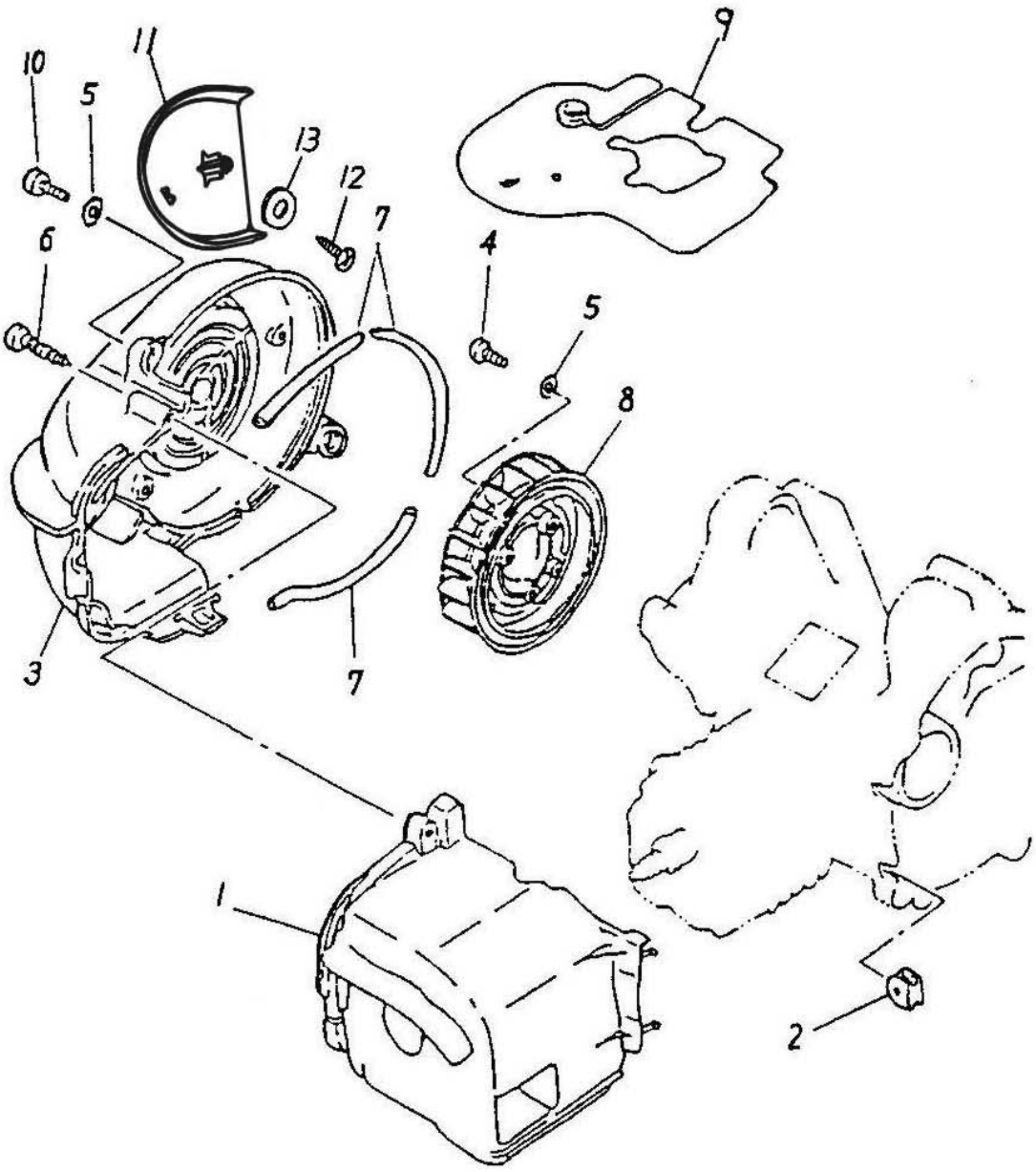

組件 編號：237-03A　　風扇,汽缸護罩 FAN,AIR SHROUD

| Item No.<br>項次 | Parts No.<br>部 品 番 號 | Unit Q'ty<br>用量 | Parts Name<br>零 件 名 稱 | |
|---|---|---|---|---|
| 1 | 19620-116-00A | 1 | CYLINDER AIR SHROUD | |
| 2 | 83552-116-000 | 2 | GROMMET | |
| 3 | 19610-116-000 | 1 | GENERATOR COVER | 無孔 |
| 4 | 91000-06015 | 4 | HEX SOCKET BOLT | 6*15 |
| 5 | 94101-0613010 | 6 | PLAIN WASHER | 6*13*1 |
| 6 | 93903-05040 | 1 | TAPPING SCREW TRUSS HEAD PHILLIPS | 5*40 |
| 7 | 17632-116-000 | 2 | DAMPER | |
| 8 | 19510-116-000 | 1 | FAN | |
| 9 | 55122-116-000 | 1 | DEFLECTOR | |
| 10 | 91000-06020 | 2 | HEX SOCKET BOLT | 6*20 |
| 11 | 19612-145-000 | 1 | GENERATOR OUTTER COVER | ADLY 字樣 |
| 12 | 93903-05016 | 1 | TAPPING SCREW TRUSS HEAD PHILLIPS | 5*16 |
| 13 | 94101-0619010 | 1 | PLAIN WASHER | 6*19*1 |

**OIL PUMP**

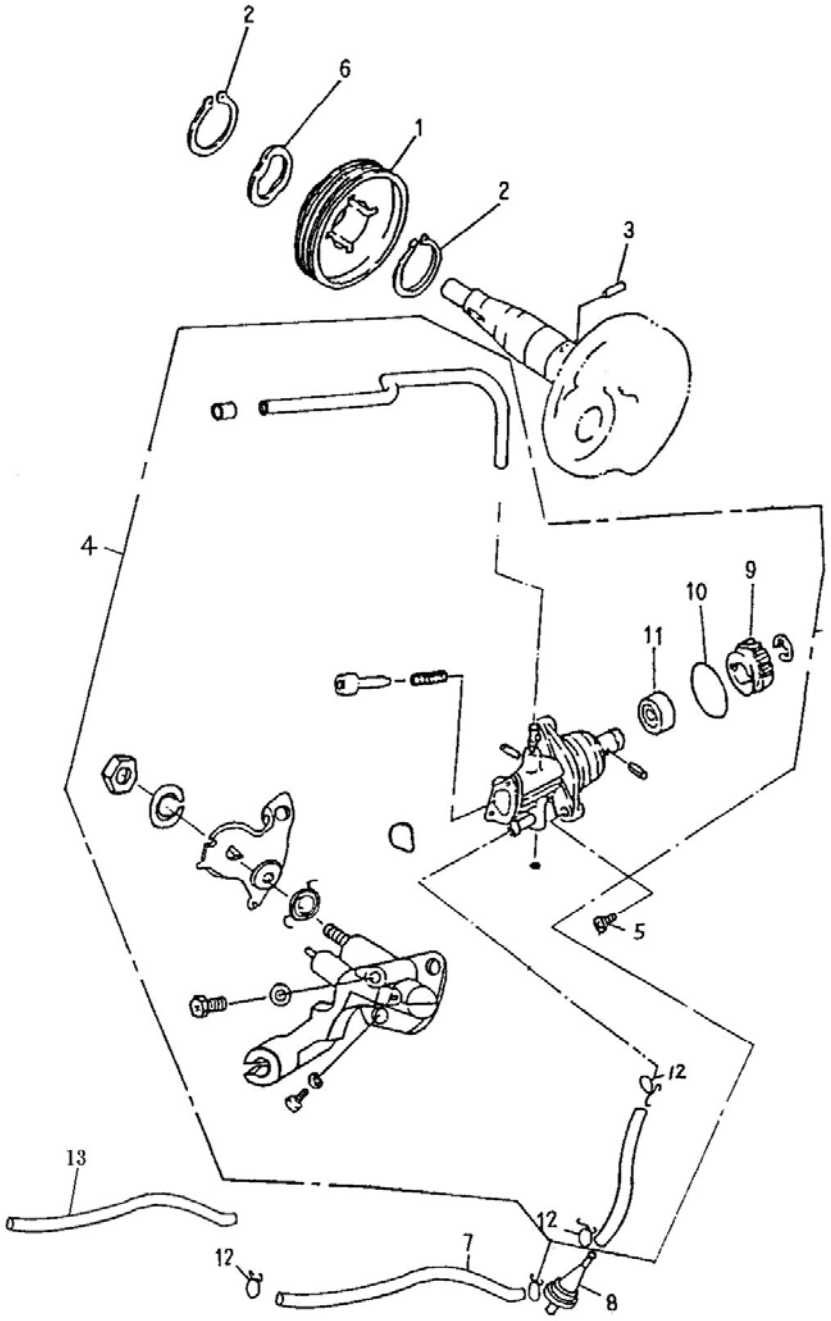

組件 編號：237-04　　潤滑油泵 OIL PUMP

| Item No. | Parts No. | Unit Q'ty | Parts Name | |
|---|---|---|---|---|
| 項次 | 部 品 番 號 | 用量 | 零 件 名 稱 | |
| 1 | 15150-104-000 | 1 | PUMP DRIVE GEAR | |
| 2 | 94511-1900S | 2 | EXTERNAL CIR CLIP | STW-19 |
| 3 | 96300-030118 | 1 | CRANK SHAFT PIN | 3*11.8 |
| 4 | 15100-116-000 | 1 | OIL PUMP | |
| 5 | 93500-05015 | 2 | PAN PHILLIPS BOLT | 5*15 |
| 6 | 15151-104-000 | 1 | WAVE WASHER | 19.2*26*0.3 |
| 7 | 94400-0408490 | 1 | TUBE | 4.8*8*490 |
| 8 | 17502-101-000 | 1 | OIL FILTER CUP | |
| 9 | 15136-110-000 | 1 | OIL PUMP WORMWHEEL | 40T |
| 10 | 91319-110-000 | 1 | OIL RING | 19.3*1.6 |
| 11 | 96500-09164 | 1 | OIL SEAL | 9.5*16*4 |
| 12 | 94510-08000 | 4 | CLIP | 8*0.8 |
| 13 | 94402-0911400 | 1 | TUBE COVER | 9*11*400 |

**REED VALVE,AIR CLEANER**

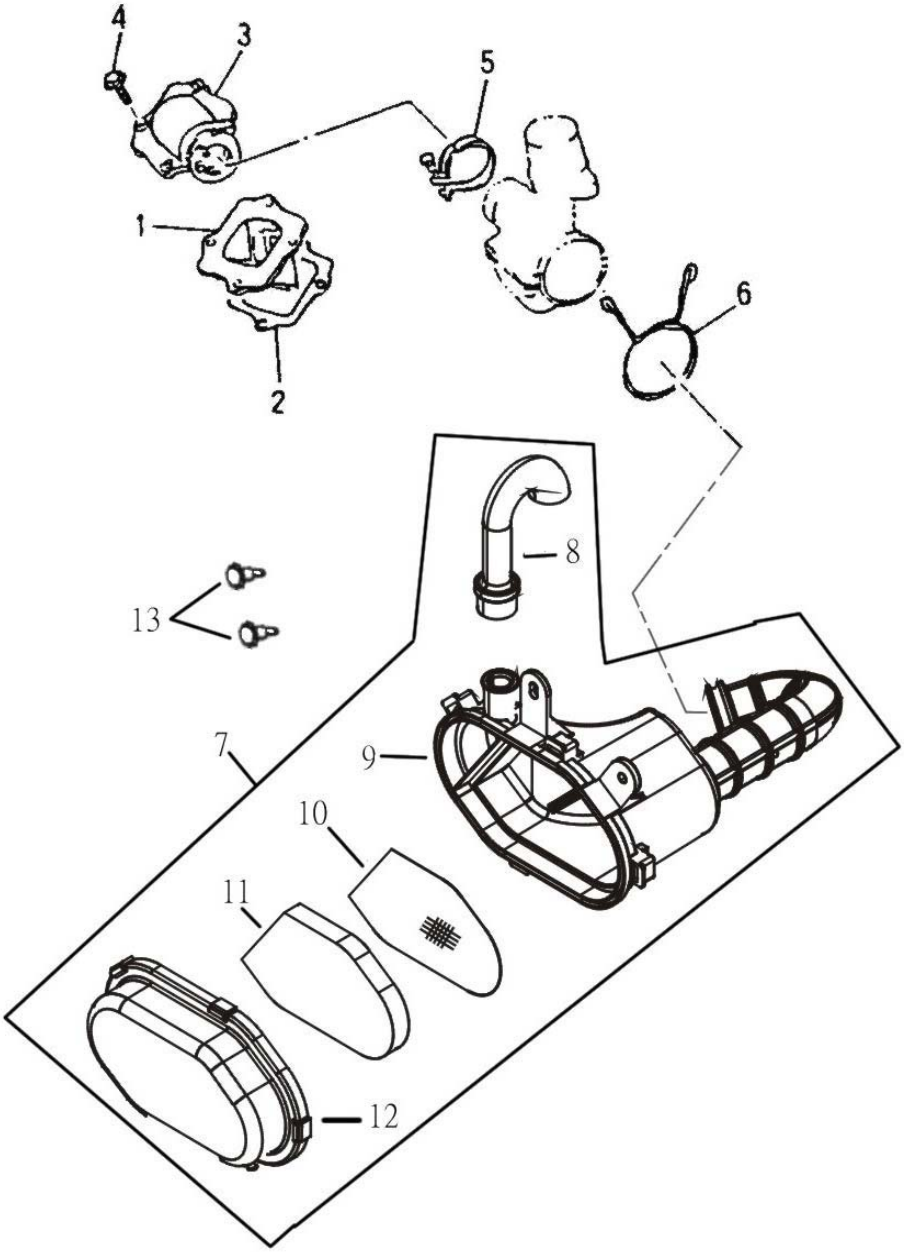

組件編號：237-05　　逆止閥,空氣濾清器 REED VALVE,AIR CLEANER

| Item No.<br>項次 | Parts No.<br>部品番號 | Unit Q'ty<br>用量 | Parts Name<br>零件名稱 | |
|---|---|---|---|---|
| 1 | 14100-116-000 | 1 | REED VALVE ASS'Y(REV.1) | |
| 2 | 17111-116-000 | 1 | REED VALVE GASKET | |
| 3 | 17100-116-000 | 1 | INTAKE MANIFOLD(3XG) | |
| 4 | 96000-06018-08 | 4 | HEX WASHER FACE BOLT | 6*18 |
| 5 | 14110-104-000 | 1 | INTAKE MANIFOLD HOSE CLAMP | 1.25 8mm |
| 6 | 94510-40000 | 1 | CLIP | 40*2.3 |
| 7 | 17200-166-000 | 1 | AIR CLEANER ASS'Y | |
| 8 | 17219-166-000 | 1 | GUIDE PIPE | PVC+NBR |
| 9 | 17206-166-000 | 1 | AIR CLEANER CASE ASS'Y | |
| 10 | 17210-166-000 | 1 | CLEANER FILTER NET | |
| 11 | 17205-166-000 | 1 | AIR CLEANER ELEMENT | |
| 12 | 17207-166-000 | 1 | AIR CLEANER COVER | |
| 13 | 92006-06014-10G | 2 | HEX BOLT | 6*14 |

**CARBURETOR**

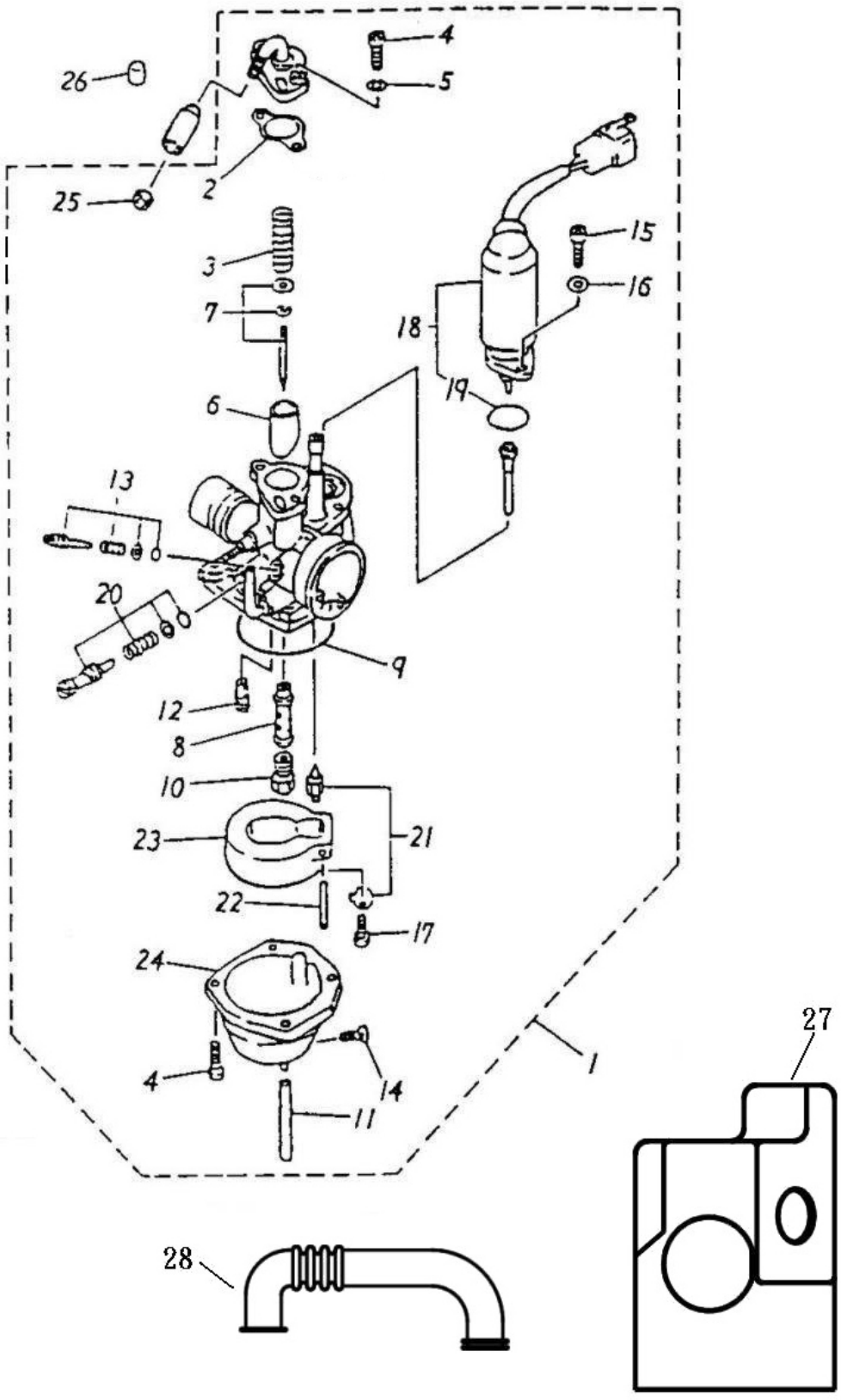

組件編號：237-06B　　化油器 CARBURETOR

| Item No.<br>項次 | Parts No.<br>部品番號 | Unit Q'ty<br>用量 | Parts Name<br>零件名稱 | |
|---|---|---|---|---|
| 1 | 16100-116-00A | 1 | CARBURETOR ASS'Y | #75 |
| 2 | 16101-116-000 | 1 | CARBURETOR GASKET | |
| 3 | 16102-116-000 | 1 | THROTTLE VALVE SPRING | |
| 4 | 93500-04014 | 6 | PAN PHILLIPS BOLT | 4*14 |
| 5 | 94111-0407010 | 2 | SPRING WASHER | 4*7*1 |
| 6 | 16103-116-000 | 1 | THROTTLE VALVE | |
| 7 | 16104-116-000 | 1 | NEEDLE SET | |
| 8 | 16105-116-000 | 1 | NEEDLE NOZZLE | E-1 |
| 9 | 16106-116-000 | 1 | FLOAT CHAMBER SEAL | |
| 10 | 16108-116-000 | 1 | MAIN NOZZLE | (#75) |
| 11 | 16109-116-000 | 1 | OVER FLOW TUBE | 4*7 |
| 12 | 16110-116-000 | 1 | PILOT JET | #17.5 |
| 13 | 16115-116-000 | 1 | AIR ADJUST SCREW SET | |
| 14 | 16111-116-000 | 1 | DRAIN PLUG | |
| 15 | 93500-04008 | 2 | PAN PHILLIPS BOLT | 4*8 |
| 16 | 94111-0406510 | 2 | SPRING WASHER | 4*6.5*1 |
| 17 | 93500-03008 | 1 | PAN PHILLIPS BOLT | 3*8 |
| 18 | 17215-116-000 | 1 | PLUNGER STARTER | |
| 19 | 91314-116-000 | 1 | OIL RING | 14*1.5 |
| 20 | 16114-116-000 | 1 | THROTTLE SCREW SET | |
| 21 | 16117-116-00A | 1 | NEEDLE VALVE ASS'Y | |
| 22 | 16119-116-000 | 1 | FLOAT PIN | |
| 23 | 16118-116-000 | 1 | FLOAT | |
| 24 | 16107-116-000 | 1 | FLOAT CHAMBER | |
| 25 | 16113-116-000 | 1 | CABLE ADJUST NUT | |
| 26 | 42615-145-001 | 1 | PURGE HOLE PLUG | ECO |
| 27 | 16140-116-000 | 1 | CARBURETOR SHROUD | |
| 28 | 11211-145-000 | 1 | TUBE BREATHER | |

**EXHAUST**

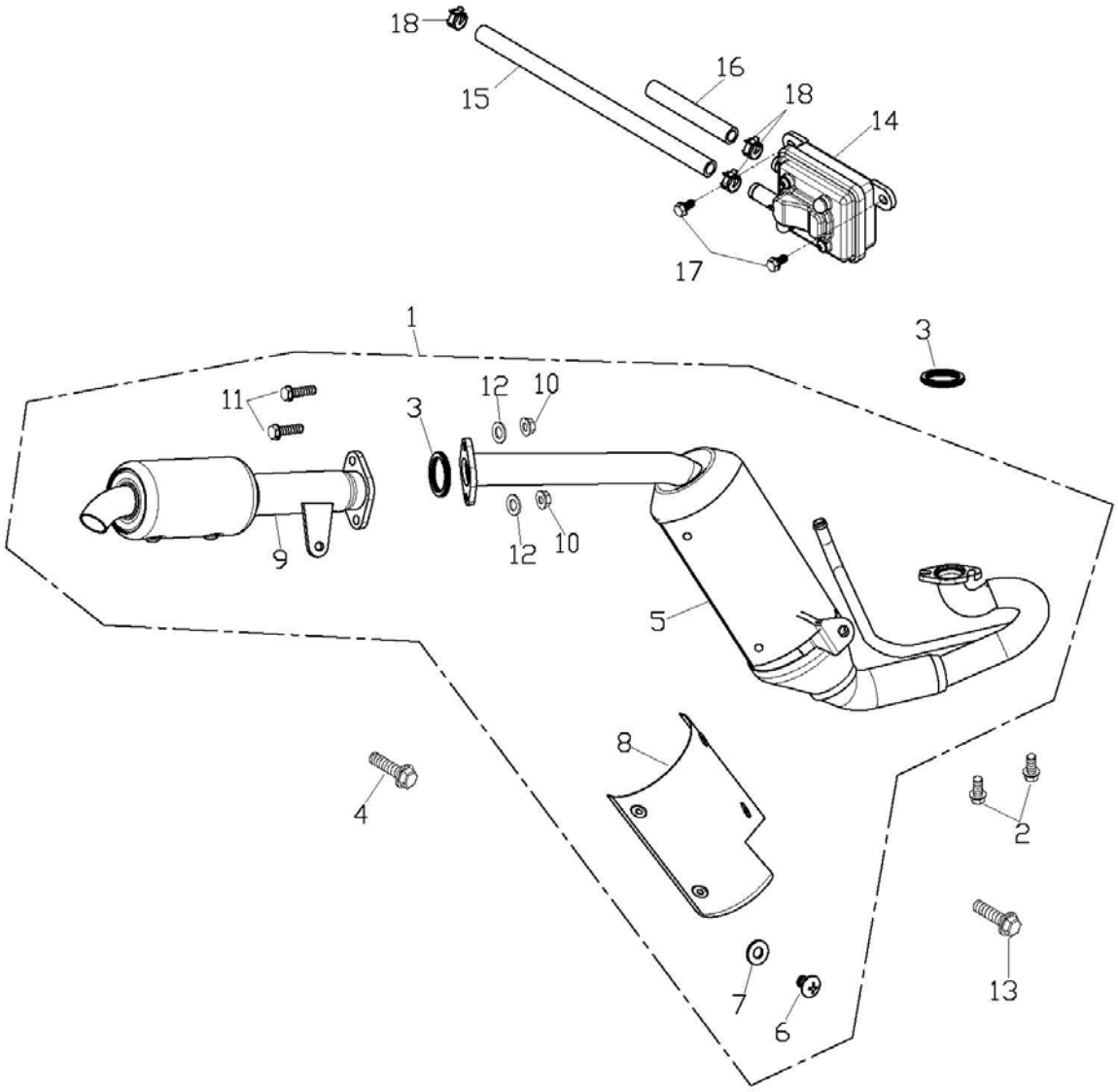

組件 編號：237-07A　　排氣裝置(EU2) EXHAUST

| Item No.<br>項次 | Parts No.<br>部 品 番 號 | Unit Q'ty<br>用量 | Parts Name<br>零 件 名 稱 | |
|---|---|---|---|---|
| 1 | 18300-231-00A | 1 | EXHAUST PIPE ASS'Y | |
| 2 | 92001-06018-10 | 2 | HEX HEAD PHILLIPS BOLT | 6*18 |
| 3 | 18291-101-000 | 2 | EXHAUST PIPE GASKET | |
| 4 | 96000-08035 | 1 | HEX WASHER FACE BOLT | |
| 5 | 18311-231-00A | 1 | EXHAUST PIPE,FRONT | |
| 6 | 93701-06008 | 6 | PAN FLAT HEAD PHILLIPS BOLT | 6*8 |
| 7 | 18292-104-000 | 6 | MUFFLER SHROUD GASKET | 6mm |
| 8 | 18318-231-000 | 1 | MUFFLER SHROUD | 大 |
| 9 | 18321-231-000 | 1 | SILENCER MUFFLER | |
| 10 | 94050-06000 | 2 | HEX FLANGE NUT | 6mm |
| 11 | 96000-06025-10 | 2 | HEX WASHER FACE BOLT | 6*25 |
| 12 | 94101-0614020 | 2 | PLAIN WASHER | 6*14*2 |
| 13 | 96000-08025-12 | 1 | HEX WASHER FACE BOLT | 8*25 |
| 14 | 17410-116-000 | 1 | REED VALVE COMP | |
| 15 | 17412-149-000 | 1 | REED VALVE COMP EX. PIPE | 140mm |
| 16 | 17411-145-000 | 1 | REED VALVE COMP IN. PIPE | L=60 |
| 17 | 96000-06015-10G | 2 | HEX WASHER FACE BOLT | 6*15 |
| 18 | 94513-18000 | 3 | SPRING CLAMP | 18mm |
| 19 | 18319-231-000 | 1 | PROTECTIVE COVER | 小 |

**CRANKCASE**

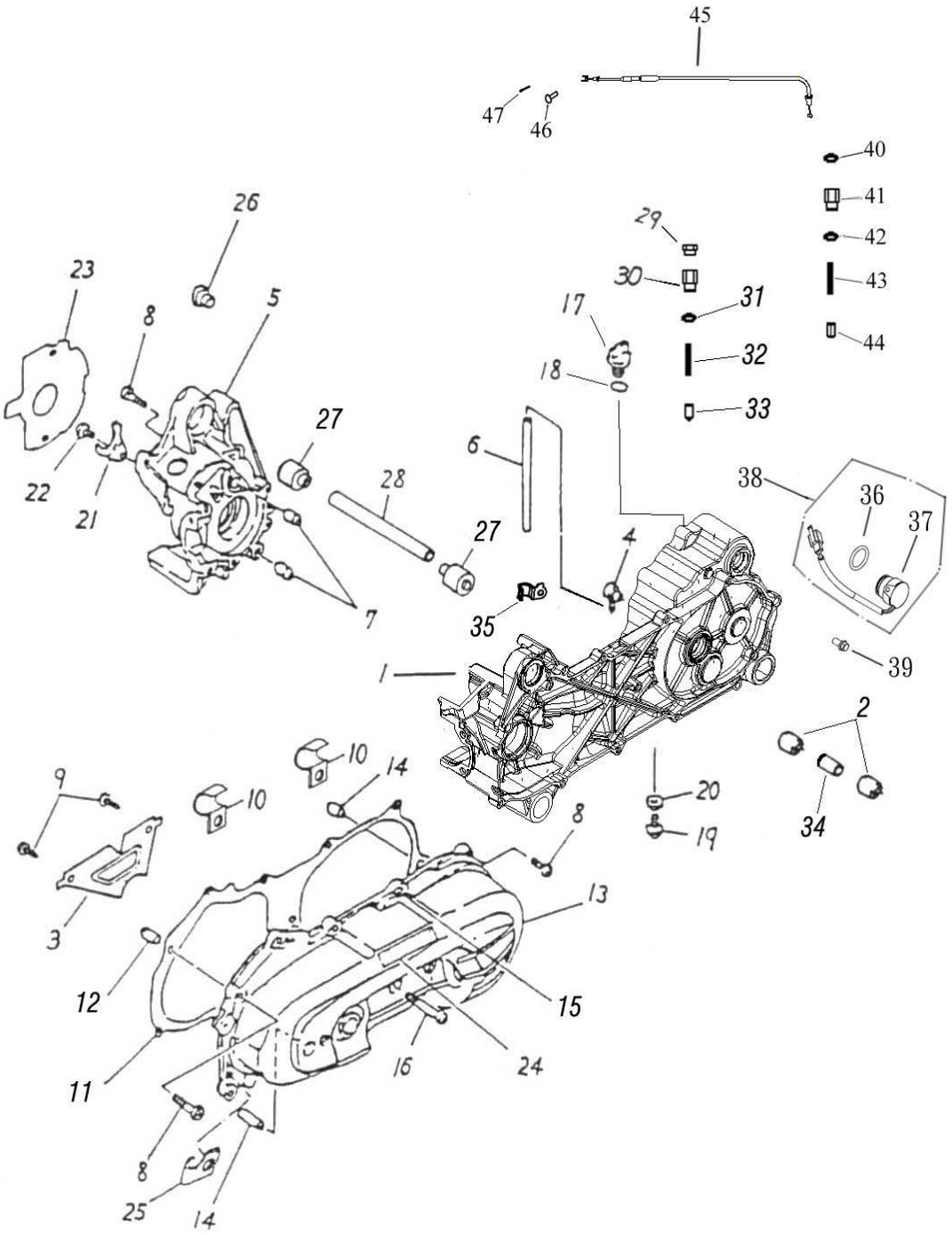
45
47
46
40
41
42
43
44
26
29
30
31
32
33
23
8
5
17
18
27
6
22
21
28
27
38
36
37
4
35
7
39
1
2
10
14
9
10
20
19
34
8
3
13
12
15
11
16
24
8
25
14

組件編號：237-08　　曲軸箱 CRANKCASE

| Item No. 項次 | Parts No. 部品番號 | Unit Q'ty 用量 | Parts Name 零件名稱 | | |
|---|---|---|---|---|---|
| 1 | 11201-201-000 | 1 | LEFT CRANKCASE | | 左曲軸箱 |
| 2 | 96400-102840 | 2 | BUSH | 10*28.1*36/40 | 橡膠襯套 |
| 3 | 11342-116-000 | 1 | PLATE L COVER | | 通氣導板 |
| 4 | 16610-104-00A | 1 | BREATHER HOSE HEAD | | 齒輪箱通氣管接頭 |
| 5 | 11101-116-000 | 1 | RIGHT CRANKCASE(REV.4) | | 右曲軸箱(版4) |
| 6 | 94400-0408200 | 1 | TUBE | 4.8*8*200 | 油管 |
| 7 | 94301-12160 | 2 | DOWEL PIN | 8.5*12*16 | 定位梢 |
| 8 | 91000-06035 | 8 | HEX SOCKET BOLT | 6*35 | 六角承窩螺栓 |
| 9 | 93903-04008 | 2 | TAPPING SCREW TRUSS HEAD PHILLIPS | 4*8 | 自攻螺絲 |
| 10 | 11351-120-00A | 2 | CLAMP | | 固定夾 |
| 11 | 11359-116-000 | 1 | CRANKCASE COVER GASKET | | 機箱蓋墊片 |
| 12 | 94301-10140 | 4 | DOWEL PIN | 8*10*14 | 定位梢* |
| 13 | 11341-201-000 | 1 | LEFT CRANKCASE COVER | | 機箱蓋(無孔) |
| 14 | 96300-080320 | 1 | SHAFT IDLER | 8*32 | 滾針(惰齒輪軸)(版1) |
| 15 | 91000-06025 | 9 | HEX SOCKET BOLT | 6*25 | 六角承窩螺栓 |
| 16 | 91000-06060 | 1 | HEX SOCKET BOLT | 6*60 | 六角承窩螺栓 |
| 17 | 15650-201-000 | 1 | OIL PLUG | 牙7MM | 機油塞 |
| 18 | 91312-104-000 | 1 | OIL RING | 11.8*2.6 | 油環 |
| 19 | 96000-08015-12 | 1 | HEX WASHER FACE BOLT | 8*15 | 六角緣面螺栓 |
| 20 | 94101-0813010 | 1 | COPPER PLAIN WASHER | 8*13*1 | 銅平面墊圈(洩機油螺絲用) |
| 21 | 11111-104-000 | 1 | OIL SEAL BRACKET | | 電盤油封固定片 |
| 22 | 91000-06010 | 1 | HEX SOCKET BOLT | 6*10 | 六角承窩螺栓 |
| 23 | 11121-116-000 | 1 | GENERATOR GASKET | | 發電機墊片 |
| 24 | 87733-116-000 | 1 | "HER CHEE" STICKER | 標準HER CHEE | 貼紙(引擎貼紙) |
| 25 | 11351-104-000 | 2 | CARBURETOR TUBE BRACKET | | 化油器洩油管固定片 |
| 26 | 11102-116-000 | 1 | PROTECT SHROUD | | 防護塞(版1) |
| 27 | 11203-145-000 | 2 | BUSH(REV.1) | 10.2*35*23/34 | 襯套(版1) |
| 28 | 11150-145-000 | 1 | CRANKCASE FIX SHAFT(REV.1) | 114mm | 曲軸箱固定軸(版1) |
| 29 | 24434-199-000 | 1 | SHIFT NUT | | 排檔固定螺帽 |
| 30 | 24702-199-000 | 1 | SHIFT BRACKET | | 排檔固定器 |
| 31 | 94103-1622012 | 2 | RING A | 16*22*1.2 | 平面墊圈(銅) |
| 32 | 24432-199-000 | 1 | SHIFT SPRING | | 排檔固定彈簧 |
| 33 | 24423-199-000 | 1 | SHIFT | | 排檔固定滑塊 |
| 34 | 96403-1015011 | 1 | SPACE TUBE | 10*15*11 | 間隔管 |

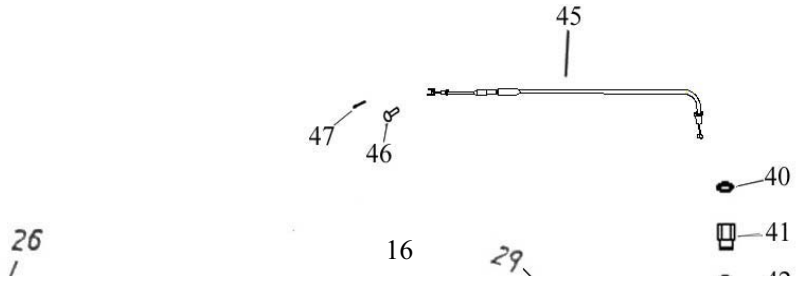

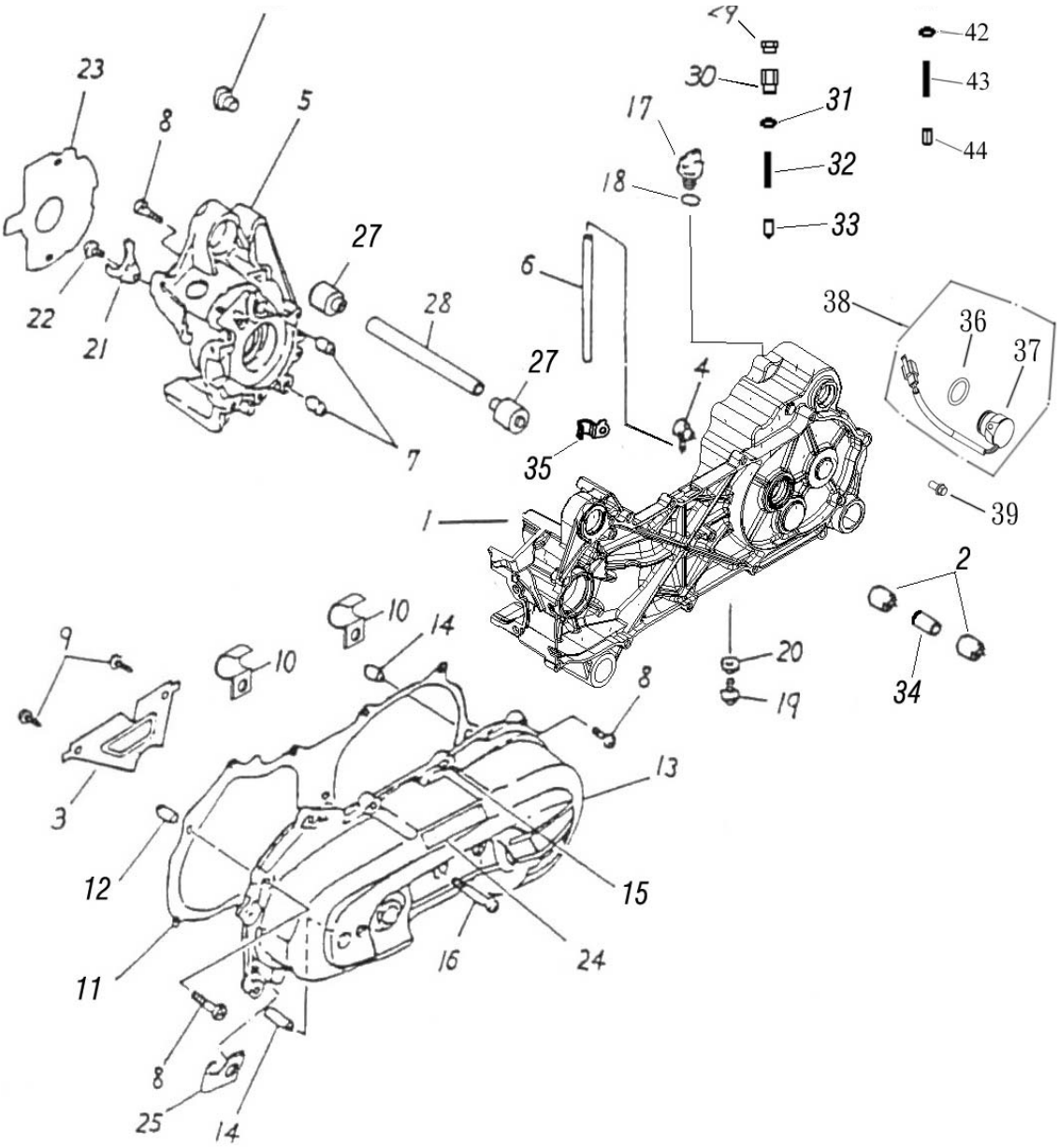

29
42
30
43
31
17
44
32
18
33
23
8
5
27
6
38
36
37
22
21
28
27
4
7
35
39
1
2
10
14
9
10
20
34
8
19
13
3
12
15
11
16
24
8
25
14

組件編號：237-08　　曲軸箱 CRANKCASE

| Item No. 項次 | Parts No. 部品番號 | Unit Q'ty 用量 | Parts Name 零件名稱 | |
|---|---|---|---|---|
| 35 | 11351-201-000 | 1 | CLAMPER CARB,DRAIN TUBE | M8孔 |
| 36 | 91317-179-000 | 1 | OIL RING | 17*2.5 |
| 37 | 35751-199-000 | 1 | SHIFT GEARS SWITCH CONTACT | |
| 38 | 35750-199-000 | 1 | SHIFT GEARS SWITCH CONTACT ASS'Y | |
| 39 | 96000-06012-08C | 1 | HEX WASHER FACE BOLT | 6*12 |
| 40 | 94103-0610008 | 1 | SEAL WASHER | 6*10*0.8 |
| 41 | 24711-201-000 | 1 | REVERSE BRACKET | |
| 42 | 94104-1420016 | 1 | SEAL WASHER | 14*20*1.6 |
| 43 | 24433-201-000 | 1 | REVERSE BRACKET SPRING | |
| 44 | 24424-201-000 | 1 | REVERSE BRACKET LUMP | |
| 45 | 43480-231-000 | 1 | REVERSE CABLE A | |
| 46 | 43451-156-000 | 1 | BRAKE CABLE BOLT | |
| 47 | 94201-16150 | 1 | COTTER PIN | 1.6*15 |
| 48 | 11100-201-000 | 1 | LEFT/RIGHT CRANKCASE | |

**STARTER**

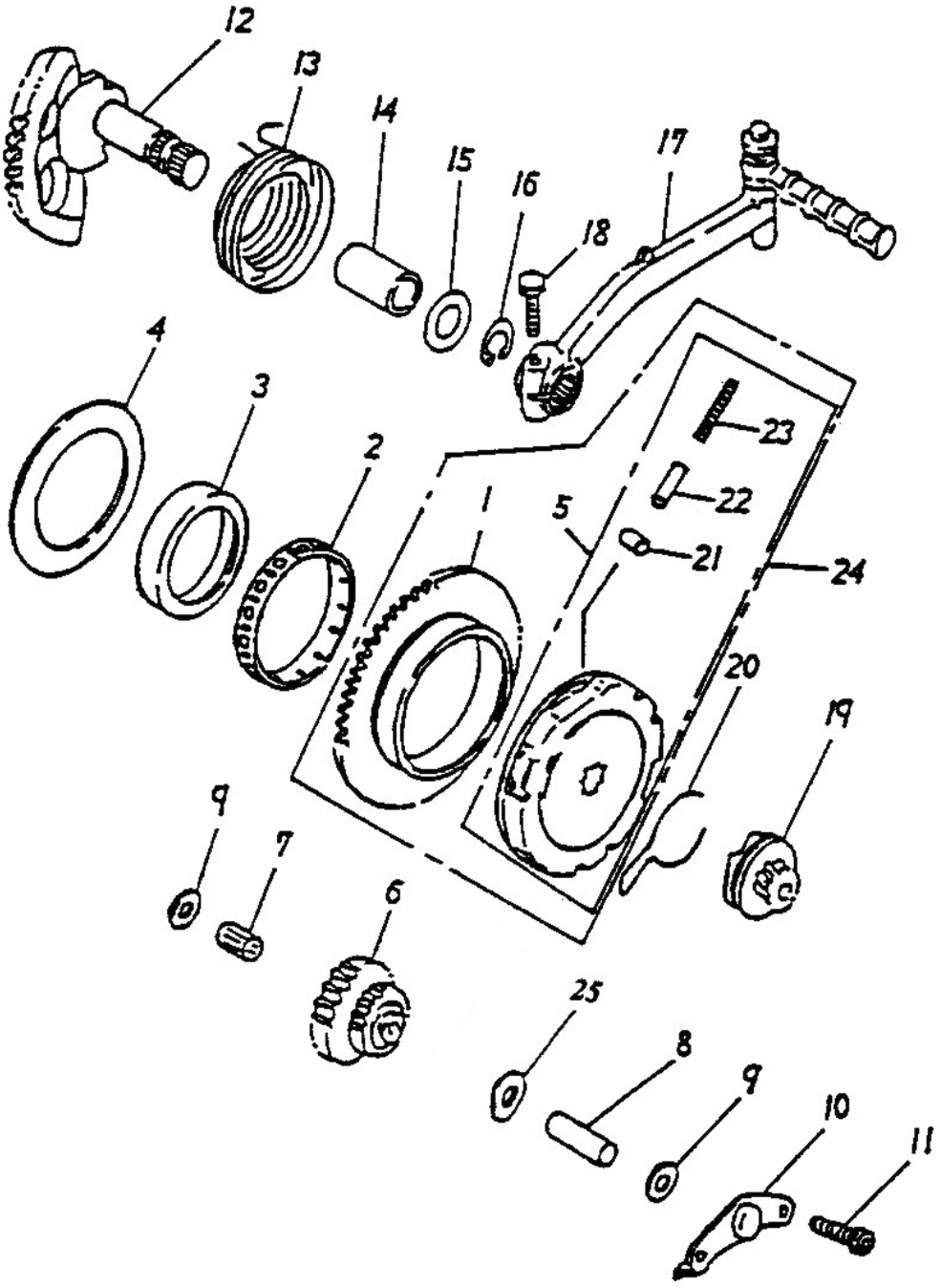

組件 編號：237-09　　起動機構 STARTER

| Item No. 項次 | Parts No. 部品番號 | Unit Q'ty 用量 | Parts Name 零件名稱 | |
|---|---|---|---|---|
| 1 | 28220-116-000 | 1 | STARTER WHEEL | |
| 2 | 96200-555912 | 1 | NEEDLE BEARING | 55*59*12.5 |
| 3 | 96202-116-000 | 1 | BOSS | |
| 4 | 94101-5676006 | 1 | PLAIN WASHER | 56*76*0.6 |
| 5 | 28410-116-001 | 1 | ELECTRIC STARTER CLUTCH SET | |
| 6 | 23422-116-000 | 1 | IDLER GEAR | |
| 7 | 96200-081210 | 1 | NEEDLE BEARING | 8*12*10 |
| 8 | 96300-080320 | 2 | SHAFT IDLER | 8*32 |
| 9 | 94101-0818008 | 3 | PLAIN WASHER | 8.2*18*0.8 |
| 10 | 11206-116-000 | 1 | IDLER GEAR PLATE | |
| 11 | 91000-06010 | 2 | HEX SOCKET BOLT | 6*10 |
| 12 | 28250-116-0A0 | 1 | STARTING SHAFT ASS'Y | |
| 13 | 28281-110-000 | 1 | STARTING SHAFT RESET SPRING | |
| 14 | 96401-152030 | 1 | BUSHING | 15*20*30 |
| 15 | 94101-1528010 | 1 | PLAIN WASHER | 15.2*28*1 |
| 16 | 94511-1500S | 1 | EXTERNAL CIR CLIP | STW-15 |
| 17 | 28300-145-000 | 1 | KICK CRANK ASS'Y(REV.1) | |
| 18 | 96000-06025-10 | 1 | HEX WASHER FACE BOLT | 6*25 |
| 19 | 28230-104-0A0 | 1 | KICK PINION ASS'Y | |
| 20 | 28223-104-000 | 1 | KICK PINION SPRING CLIP | |
| 21 | 28411-116-001 | 3 | CLUTCH ROLLER | 6*8 |
| 22 | 28412-116-000 | 3 | CLUTCH GUIDER | |
| 23 | 28413-116-001 | 3 | CLUTCH SPRING | |
| 24 | 28400-116-001 | 1 | ELECTRIC STARTER CLUTCH ASS'Y | |
| 25 | 92022-851618 | 1 | WAVE WASHER | 8.5*16*1.8 |

**CLUTCH**

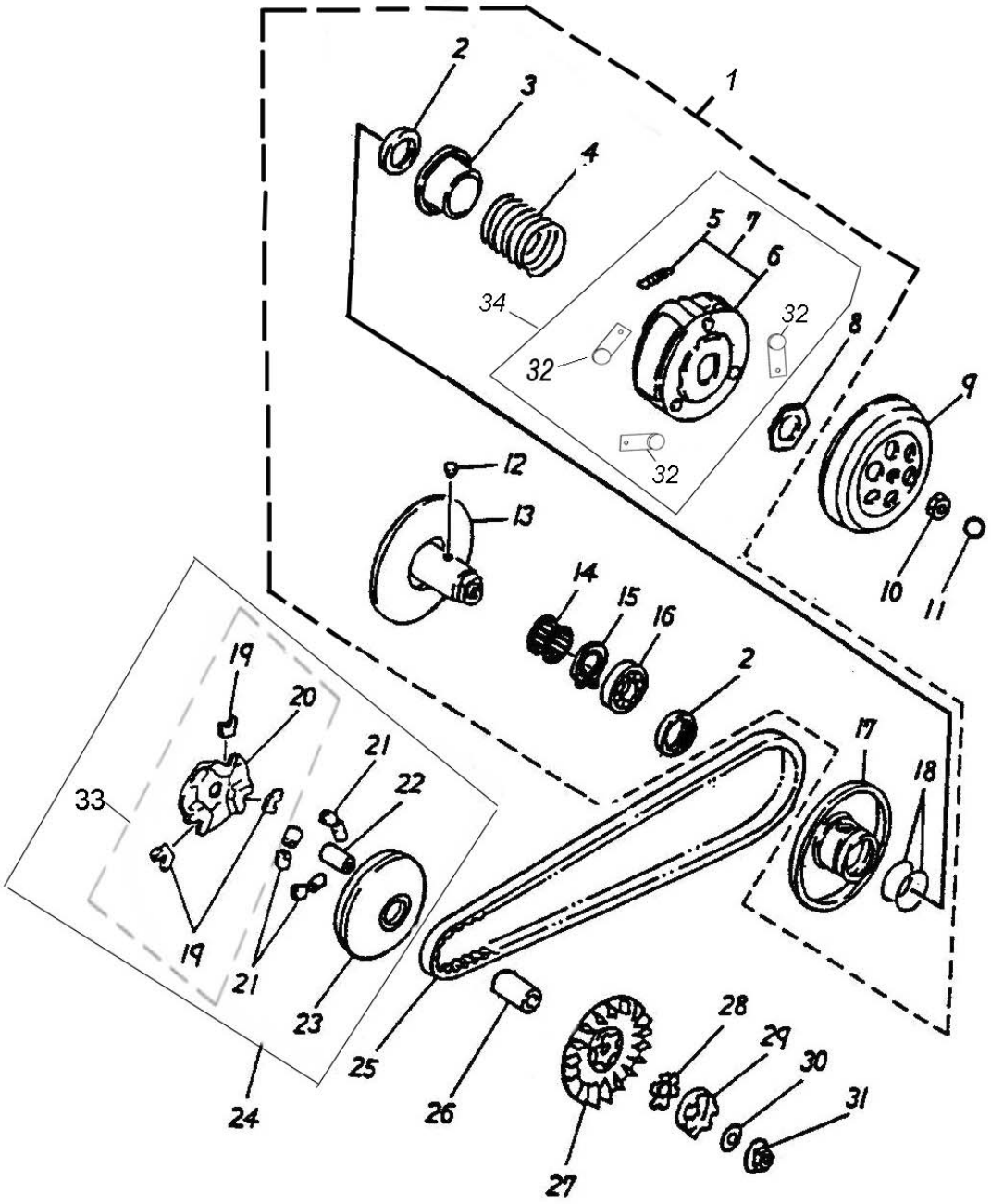
1
2
3
4
5
7
6
34
32
32
32
8
9
10
11
12
13
14
15
16
2
17
18
19
20
21
22
33
19
21
23
24
25
26
27
28
29
30
31

組件編號：237-10　　離合器 CLUTCH

| Item No. 項次 | Parts No. 部品番號 | Unit Q'ty 用量 | Parts Name 零件名稱 | |
|---|---|---|---|---|
| 1 | 22000-201-000 | 1 | DRIVE FACE ASS'Y | B |
| 2 | 96500-33394 | 2 | OIL SEAL | 33*39*4 |
| 3 | 23237-116-000 | 1 | SECONDARY SPRING SEAT | |
| 4 | 23233-116-00A | 1 | CLUTCH REDUCER SPRING | L75 |
| 5 | 22401-116-000 | 3 | CLUTCH WEIGHT SPRING | |
| 6 | 22350-116-000 | 1 | CLUTCH CARRIER | |
| 7 | 22535-116-000 | 1 | CLUTCH WEIGHT SET | |
| 8 | 90202-116-000 | 1 | NUT | 28*38*4 |
| 9 | 22100-116-000 | 1 | CLUTCH COVER COMP | |
| 10 | 94001-10000 | 1 | RH. HEX JAM NUT | 10MM |
| 11 | 91313-104-000 | 1 | OIL RING | 12.5*3 |
| 12 | 23225-116-000 | 2 | GUIDE PIN | |
| 13 | 23200-116-000 | 1 | SECONDARY FIX SLOT WHEEL | |
| 14 | 96200-172518 | 1 | NEEDLE BEARING | HKS-17*25*18 |
| 15 | 94512-2400R | 1 | INTERNAL CIR CLIP | RTW-24 |
| 16 | 96100-6901U | 1 | RADIAL BALL BEARING | 6901LU |
| 17 | 23220-116-000 | 1 | SECONDARY SLIDING SLOT WHEEL | |
| 18 | 91336-104-000 | 2 | OIL RING | 36*2 |
| 19 | 22132-104-000 | 3 | CAM PLATE SLIDER | |
| 20 | 22131-116-000 | 1 | CAM PLATE | |
| 21 | 22121-116-000 | 6 | WEIGHT ROLLER | |
| 22 | 96401-182322 | 1 | BUSHING | 18*23*22.5 |
| 23 | 22110-201-000 | 1 | PRIMARY SLIDING SLOT WHEEL | |
| 24 | 22103-116-000 | 1 | SLIDING DRIVE FACE ASS'Y | A |
| 25 | 23100-231-000 | 1 | V-BELT | 798*17*28 |
| 26 | 96401-131838 | 1 | BUSHING | 13*18*38 |
| 27 | 22102-116-000 | 1 | PRIMARY FIX SHEAVE | |
| 28 | 22150-110-000 | 1 | LCAW WASHER | |
| 29 | 22140-110-000 | 1 | ONEWAY CLUTCH | |
| 30 | 22145-104-000 | 1 | CONE SPRING WASHER | 10.2*24*2.6 |
| 31 | 94050-10000 | 1 | HEX FLANGE NUT WITH SERRATION | 10mm |
| 32 | 22540-201-000 | 3 | SPRING PLATE | |
| 33 | 22133-116-000 | 1 | CAM PLATE ASS'Y | |
| 34 | 22530-201-000 | 1 | CLUTCH WEIGHT ASS;Y | |

**TRANSMISSION**

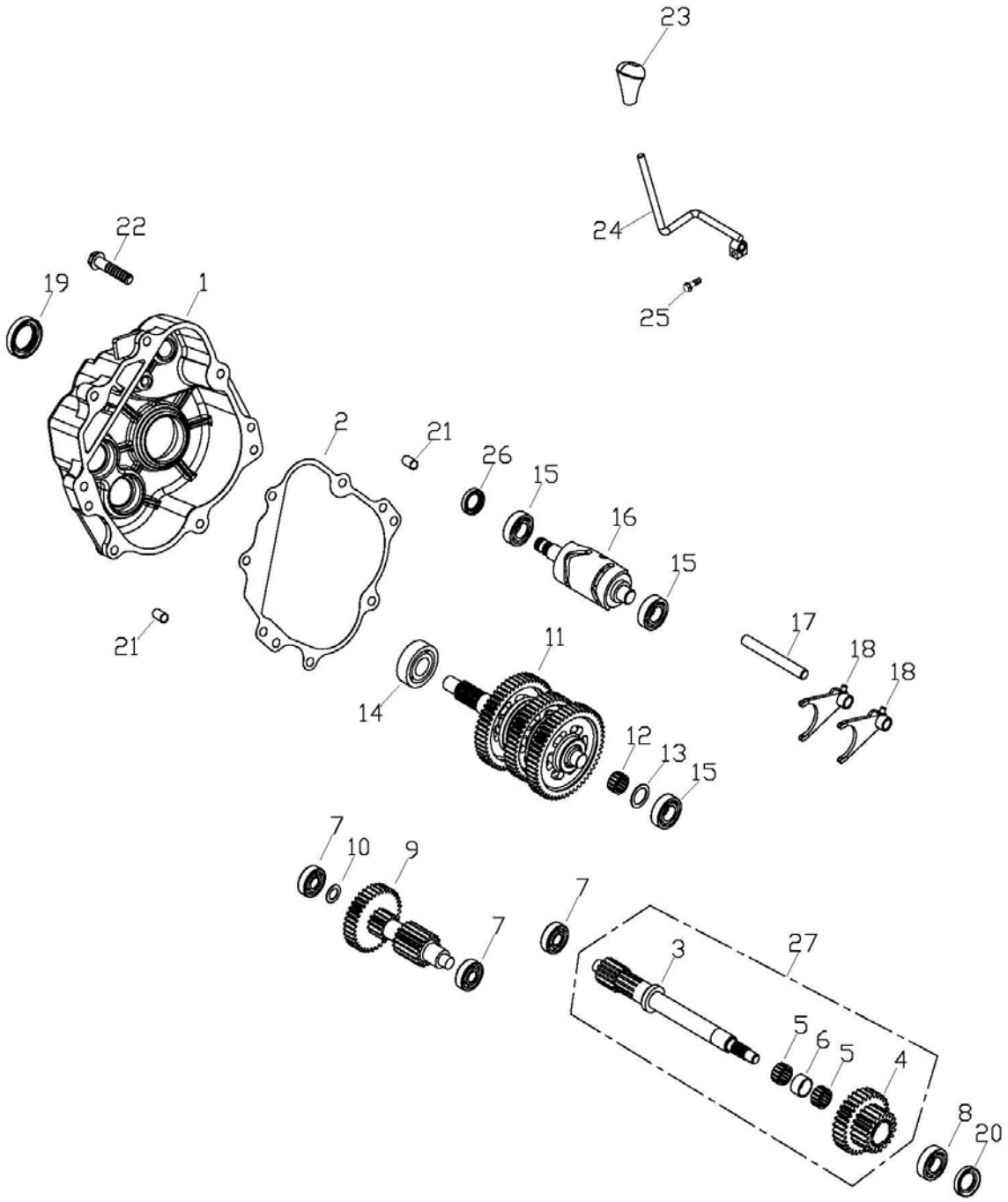

組件 編號：237-11　　傳動機構 TRANSMISSION

| Item No. 項次 | Parts No. 部品番號 | Unit Q'ty 用量 | Parts Name 零件名稱 | | |
|---|---|---|---|---|---|
| 1 | 21301-199-000 | 1 | MISSION COVER | 成品 | |
| 2 | 21395-199-000 | 1 | MISSION COVER GASKET | | |
| 3 | 23411-199-000 | 1 | DRIVE SHAFT | | |
| 4 | 23407-199-000 | 1 | IDLE GEAR | | |
| 5 | 96200-172110 | 2 | NEEDLE BEARING | 17*21*10 | |
| 6 | 96403-172112 | 1 | SPACE TUBE | 17*21*12 | |
| 7 | 96100-62010 | 3 | RADIAL BALL BEARING | | 6201 |
| 8 | 96100-60030 | 1 | RADIAL BALL BEARING | | 6003 |
| 9 | 23211-199-000 | 1 | MIDDLE AXLE | | |
| 10 | 94105-1220010 | 1 | PLAIN WASHER | 12*20*1 | |
| 11 | 23220-199-00A | 1 | DRIVE AXLE ASS'Y | | |
| 12 | 96200-182213 | 1 | NEEDLE BEARING | 18*22*13 | |
| 13 | 94105-1826010 | 1 | PLAIN WASHER | 18*26*1 | |
| 14 | 96100-62040 | 1 | RADIAL BALL BEARING | 6204C3 | |
| 15 | 96100-62020 | 3 | RADIAL BALL BEARING | | 6202 |
| 16 | 24630-199-001 | 1 | GEAR SHIFT ARM | | |
| 17 | 24241-199-000 | 1 | GEAR SHIFT FORK GUIDE SHAFT | 12*100 | |
| 18 | 24211-199-000 | 2 | GEAR SHIFT FORK | | |
| 19 | 96500-20357 | 1 | OIL SEAL | 20*35*7 | |
| 20 | 96500-17306 | 1 | OIL SEAL | 17*30*6 | |
| 21 | 94301-08140 | 2 | DOWEL PIN | 6.3*8*14 | |
| 22 | 96000-08035-12G | 7 | HEX FLANGE BOLT | M8*35 | |
| 23 | 24807-231-000 | 1 | KNOB | 新品 | |
| 24 | 24707-237-000 | 1 | SHIFT ROD | | |
| 25 | 96000-06022-10B | 1 | HEX FLANGE BOLT | 6*22 | |
| 26 | 96500-15267 | 1 | OIL SEAL | 15*26*7 | |
| 27 | 23202-199-000 | 1 | MAIN SHAFT ASS'Y | | |

**GENERATOR,STARTING MOTOR**

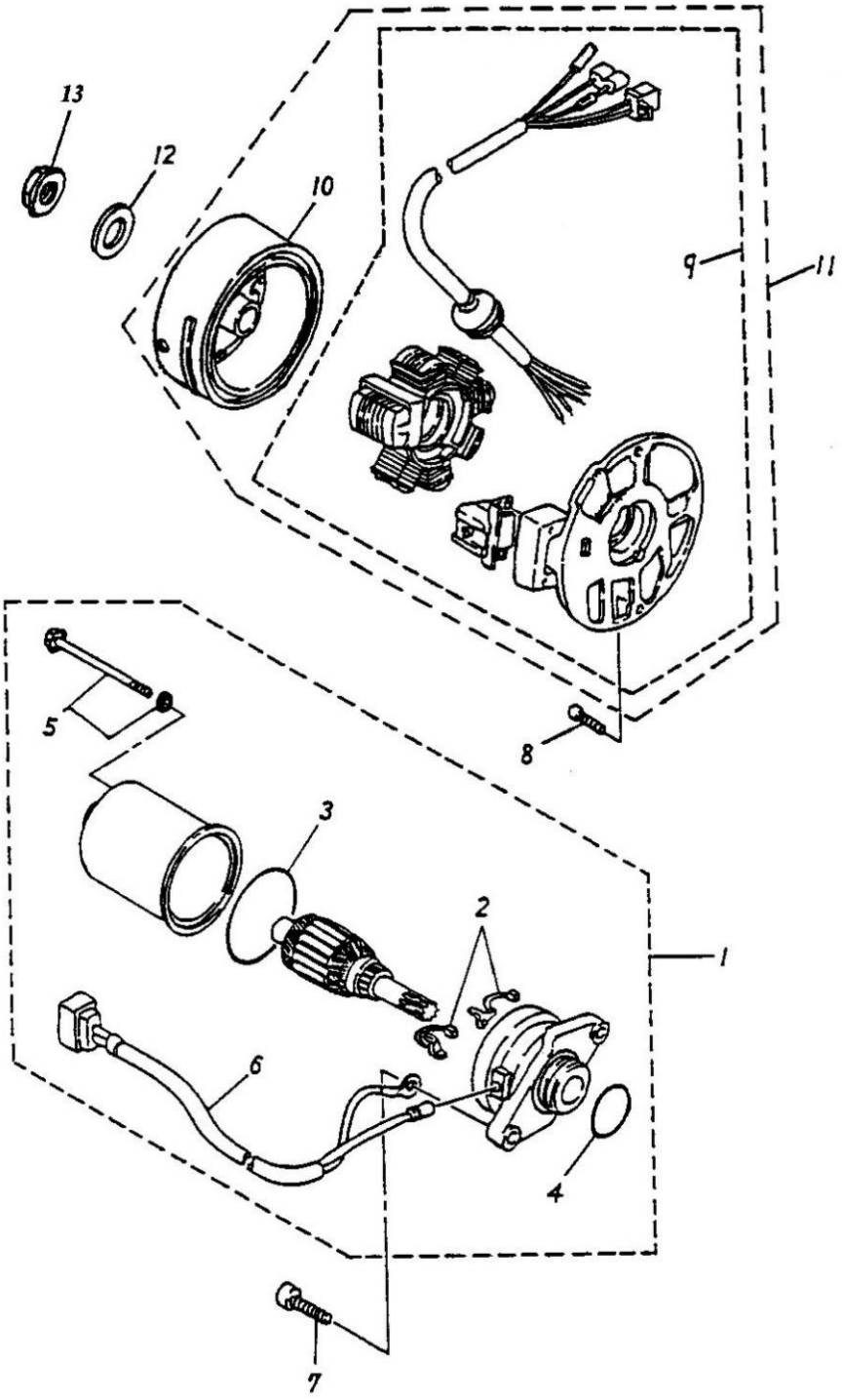

組件編號：237-12　　發電機,起動馬達 GENERATOR,STARTING MOTOR

| Item No.<br>項次 | Parts No.<br>部品番號 | Unit Q'ty<br>用量 | Parts Name<br>零件名稱 | |
|---|---|---|---|---|
| 1 | 31200-116-000 | 1 | STARTING MOTOR ASS'Y | |
| 2 | 31201-116-000 | 1 | BRUSH SET | |
| 3 | 91342-104-000 | 1 | OIL RING | 42*1.5 |
| 4 | 91323-104-000 | 1 | OIL RING | 23*2 |
| 5 | 90115-116-000 | 2 | BOLT SET | |
| 6 | 31202-116-000 | 1 | CORD COMP. | |
| 7 | 91000-06020 | 2 | HEX SOCKET BOLT | 6*20 |
| 8 | 91000-06015 | 2 | HEX SOCKET BOLT | 6*15 |
| 9 | 31120-116-000 | 1 | STATOR COMP. | |
| 10 | 31110-116-000 | 1 | GENERATOR FLYWHEEL | |
| 11 | 31100-116-000 | 1 | GENERATOR ASS'Y | |
| 12 | 94101-1022020 | 1 | PLAIN WASHER | 10*22*2 |
| 13 | 94050-10000 | 1 | HEX FLANGE NUT WITH SERRATION | 10mm |

**FRAME BODY**

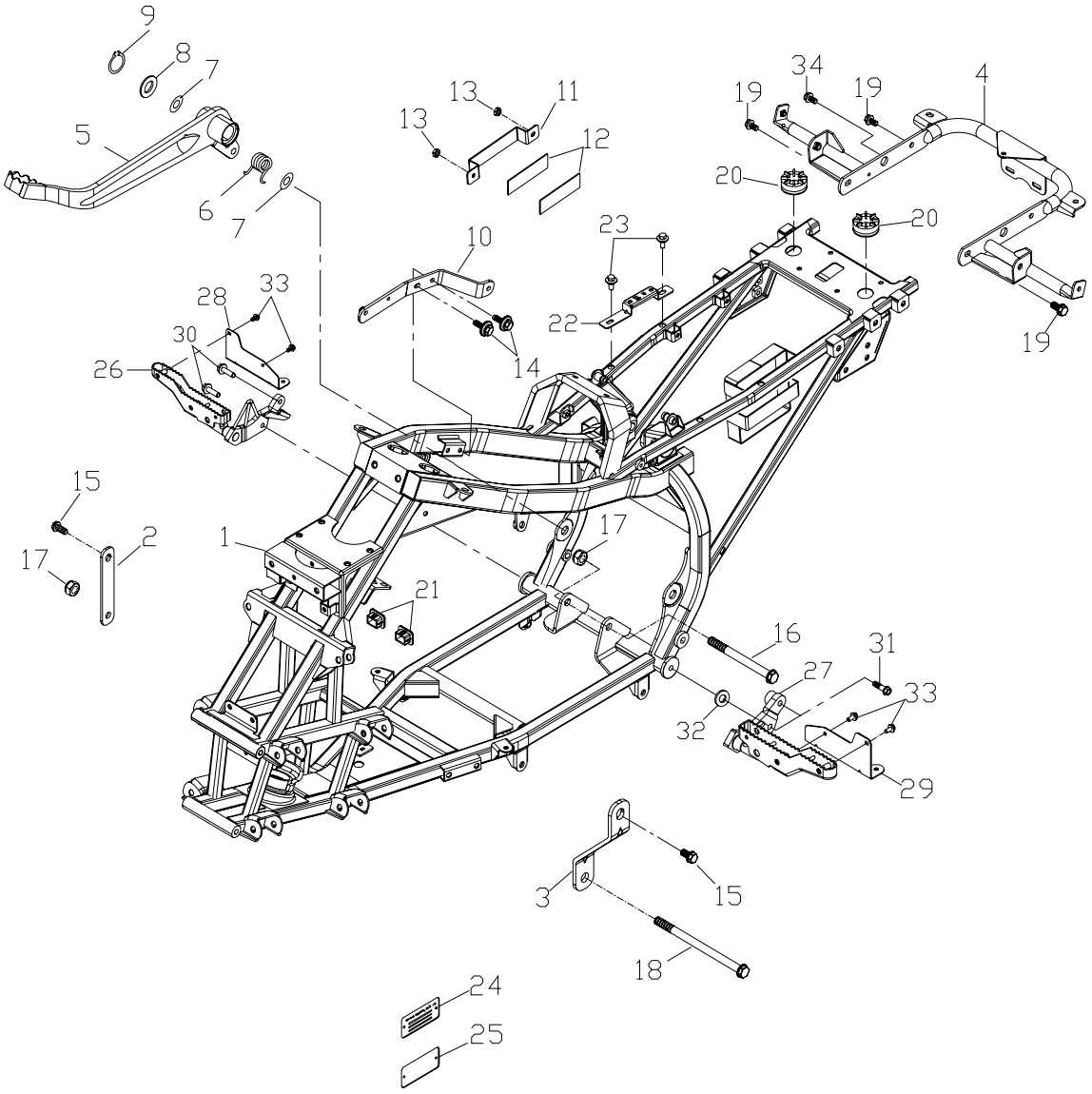
9
8
7
5
6
7
13
11
13
12
34
19
19
4
20
20
23
10
22
14
19
28
33
30
26
15
2
17
1
17
21
16
31
27
33
32
29
3
15
18
24
25

組件編號：237-13A　　車架(92/61) FRAME BODY

| Item No. | Parts No. | Unit Q'ty | Parts Name | |
|---|---|---|---|---|
| 項次 | 部品番號 | 用量 | 零件名稱 | |
| 1 | 50100-237-000 | 1 | FRAME COMP | |
| 2 | 50353-231-000 | 1 | R. ENGINE FIXED PLATE | |
| 3 | 50354-231-000 | 1 | L. ENGINE FIXED PLATE | |
| 4 | 50105-223-000 | 1 | REAR BUMPER | |
| 5 | 46500-197-001 | 1 | BRAKE PEDAL COMP | |
| 6 | 46501-169-000 | 1 | RETURN SPRING | |
| 7 | 91316-169-000 | 2 | OIL RING | 16.7*3.2 |
| 8 | 94101-1731023 | 1 | PLAIN WASHER | 17.6*31*2.3 |
| 9 | 94511-1700S | 1 | EXTERNAL CIRCLIP | STW-17 |
| 10 | 54137-231-000 | 1 | BRACKET OF CDI | |
| 11 | 31504-145-000 | 1 | BATTERY BRACKET | |
| 12 | 17505-145-000 | 2 | SPONGE PAD | 15*100*4 |
| 13 | 94050-06000 | 2 | HEX FLANGE NUT | 6mm |
| 14 | 96000-06010-10 | 2 | HEX WASHER FACE BOLT | 6*10 |
| 15 | 96000-10020-14G | 2 | HEX WASHER FACE BOLT | 10*20 |
| 16 | 96000-10115-14G | 2 | HEX WASHER FACE BOLT | 10*115 |
| 17 | 90350-10000 | 2 | NYLON NUT | 10mm*1.25 |
| 18 | 96000-10208-14 | 1 | HEX WASHER FACE BOLT | 10*208 |
| 19 | 96000-08015-12G | 3 | HEX FLANGE BOLT | M8*15 |
| 20 | 77211-145-000 | 2 | RUBBER | |
| 21 | 96422-197-000 | 2 | TUBE CAP | |
| 22 | 50228-169-000 | 2 | REAR COVER BRACKET | |
| 23 | 96000-06012-10G | 4 | HEX WASHER FACE BOLT | 6*12 |
| 24 | 50110-101-001 | 1 | I.D PLATE | |
| 25 | 50133-169-000 | 1 | FIXED PLATE | |
| 26 | 50717-223-000 | 1 | R.STEP BAR COMP | |
| 27 | 50718-223-000 | 1 | L.STEP BAR COMP | |
| 28 | 64314-223-000 | 1 | R. FIXED POLE | |
| 29 | 64315-223-000 | 1 | L. FIXED POLE | |
| 30 | 96000-10035-14G | 2 | HEX FLANGE BOLT | M10*35 |

**FRAME BODY**

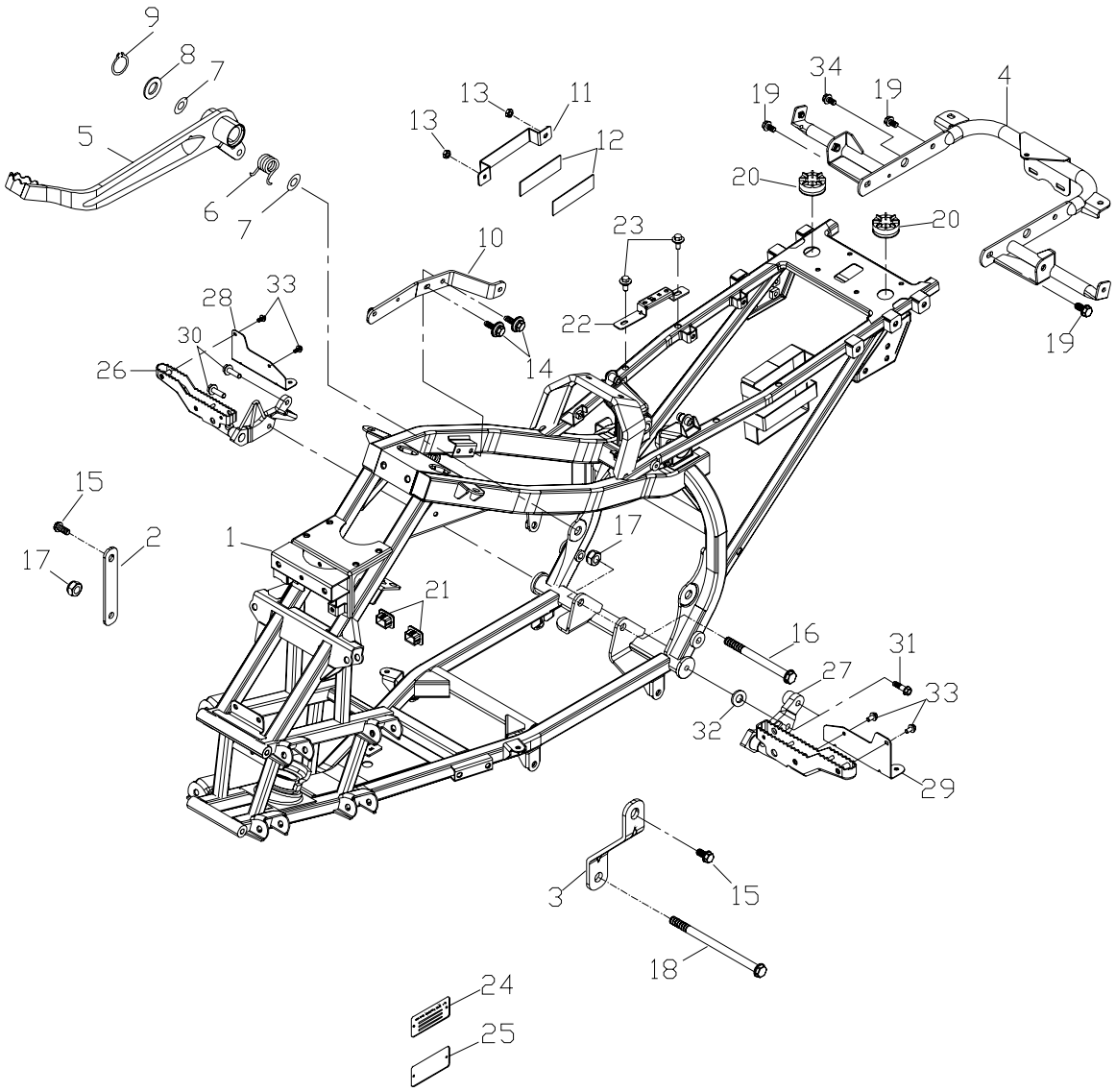
9
8
7
5
6
7
13
11
13
12
34
19
19
4
20
20
23
10
22
14
19
28
33
30
26
15
2
17
1
17
21
16
31
27
33
32
29
3
15
18
24
25

組件 編號：237-13A　　車架(92/61) FRAME BODY

| Item No. 項次 | Parts No. 部 品 番 號 | Unit Q'ty 用量 | Parts Name 零 件 名 稱 | |
|---|---|---|---|---|
| 31 | 96000-10050-14G | 2 | HEX FLANGE BOLT | M10*50 |
| 32 | 94101-1020020G | 1 | COPPER PLAIN WASHER | 10*20*2 |
| 33 | 92006-06014-10G | 4 | HEX WASHER FACE BOLT | 6*14 |
| 34 | 96000-10015-14G | 1 | HEX FLANGE BOLT | M10*15 |

**ARM , FLOOR PANEL**

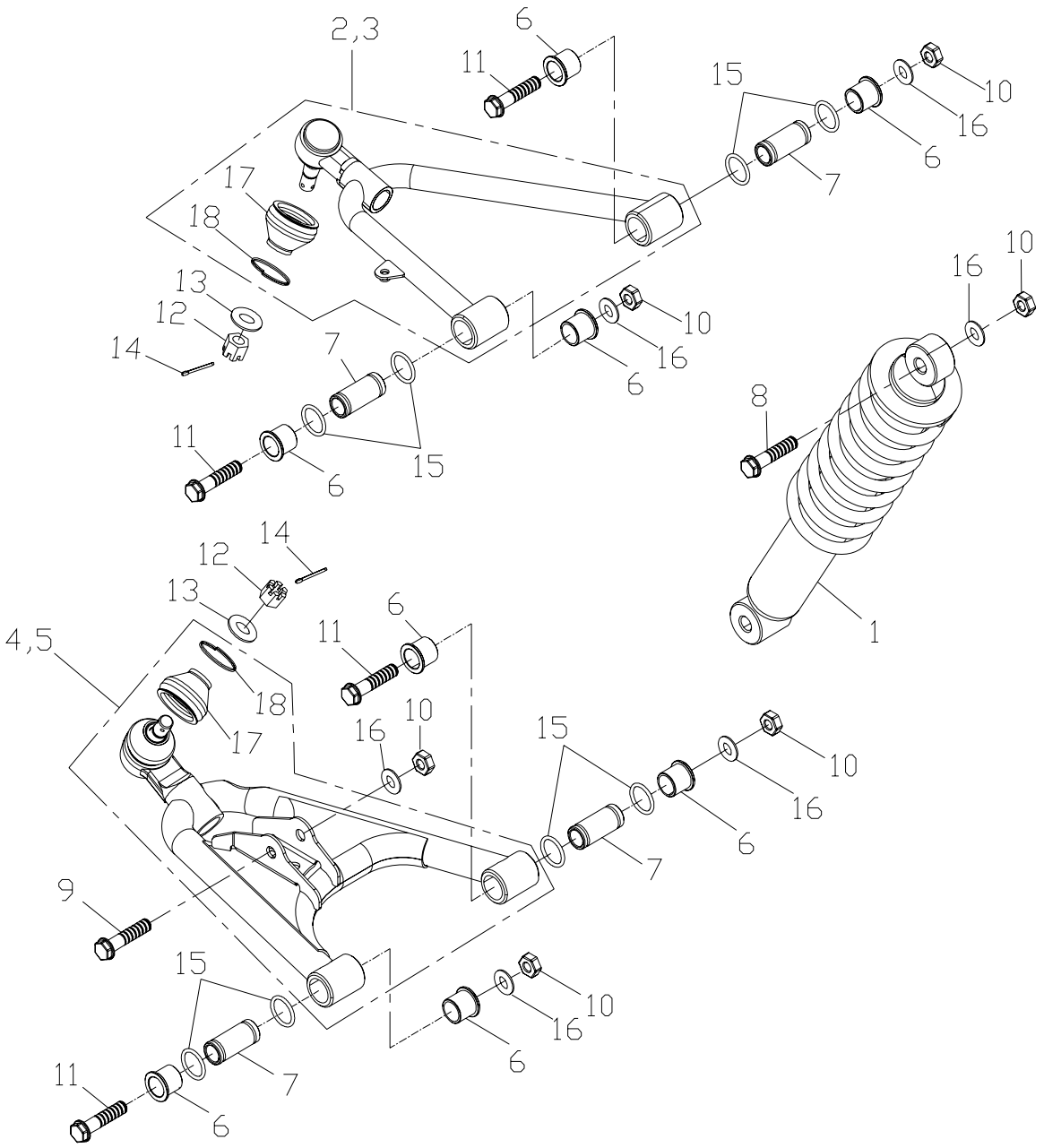

組件編號：237-14A　　三腳架,腳踏板(92/61) ARM,FLOOR PANEL

| Item No.<br>項次 | Parts No.<br>部品番號 | Unit Q'ty<br>用量 | Parts Name<br>零件名稱 | |
|---|---|---|---|---|
| 1 | 51400-231-000 | 2 | FRONT CUSHION ASS`Y | |
| 2 | 51210-197-000 | 1 | RIGHT UP SUSPENSION ARM | |
| 3 | 51310-197-000 | 1 | LEFT UP SUSPENSION ARM | |
| 4 | 51610-169-000 | 1 | R. LOWER SUSPENSION ARM | |
| 5 | 51510-169-000 | 1 | L. LOWER SUSPENSION ARM | |
| 6 | 51202-169-000 | 16 | BUSH | φ17 |
| 7 | 51350-169-000 | 8 | BUSHING | |
| 8 | 96000-10040-14G | 2 | HEX FLANGE BOLT | M10*40 |
| 9 | 96000-10050-14G | 2 | HEX FLANGE BOLT | M10*50 |
| 10 | 90350-10000G | 12 | NYLON NUT | M10*P1.25 |
| 11 | 96000-10065-14G | 8 | HEX FLANGE BOLT | M10*65 |
| 12 | 94051-12000G | 4 | SCOTCH NUT | M12 |
| 13 | 94101-1222020 | 4 | PLAIN WASHER | 12*22*2 |
| 14 | 94201-03320 | 4 | COTTER PIN | 3*32 |
| 15 | 91312-169-00A | 16 | O-RING | 12.5*2.4 |
| 16 | 94101-1020020 | 12 | PLAIN WASHER | 10*20*2 |
| 17 | 51212-169-000 | 4 | DUST SEAL | |
| 18 | 51219-169-000 | 4 | SPRING | |

**F/R BUMPER**

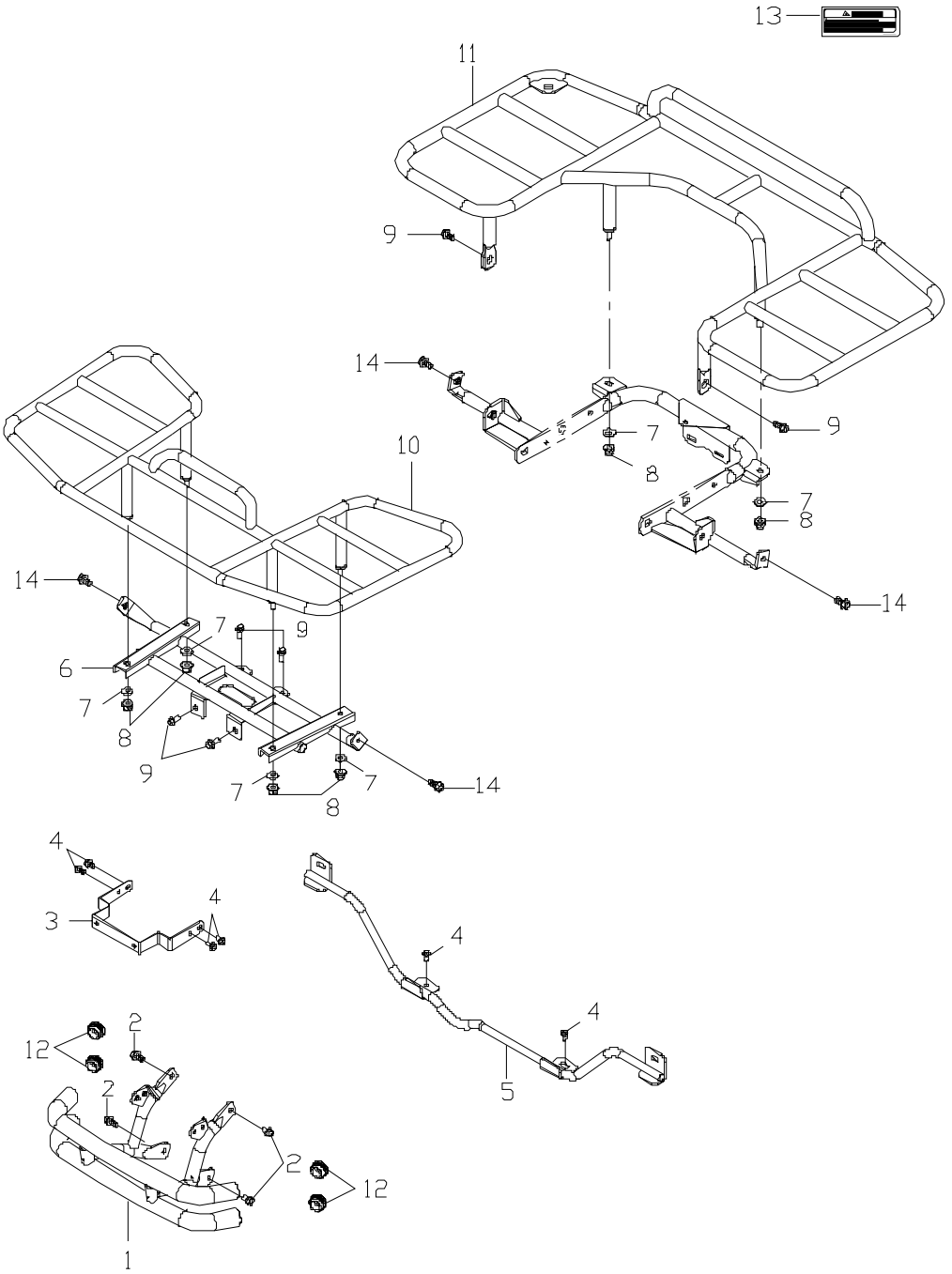

組件編號：237-15　　前/後防護桿 F/R BUMPER

| Item No.<br>項次 | Parts No.<br>部品番號 | Unit Q'ty<br>用量 | Parts Name<br>零件名稱 | |
|---|---|---|---|---|
| 1 | 50104-223-000 | 1 | FRONT BUMPER | |
| 2 | 96000-10015-14G | 4 | HEX FLANGE BOLT | M10*15 |
| 3 | 64343-223-000 | 1 | FRONT COVER FIXED POLE | |
| 4 | 92000-06014-10K | 6 | HEX BOLT | 6*14 |
| 5 | 64344-223-001 | 1 | FRONT COVER FIXED POLE | |
| 6 | 64309-223-000 | 1 | FRONT COVER FIXED POLE | |
| 7 | 94101-0815020 | 6 | PLAIN WASHER | 8*15*2 |
| 8 | 90350-08000G | 6 | NYLON NUT | M8 |
| 9 | 96000-08015-12G | 6 | HEX FLANGE BOLT | M8*15 |
| 10 | 61200-223-000 | 1 | FRONT LUGGAGE CARRIER SET | |
| 11 | 81200-223-000 | 1 | REAR LUGGAGE CARRIER SET | |
| 12 | 96421-197-000 | 4 | RUBBER CAP | |
| 13 | 87770-169-000 | 2 | WARNING LABLE(FRONT/REAR LOAD) | |
| 14 | 90111-06014-18G | 4 | LADDER BOLT | 6*14*3 |

**BODY COVER,SEAT**

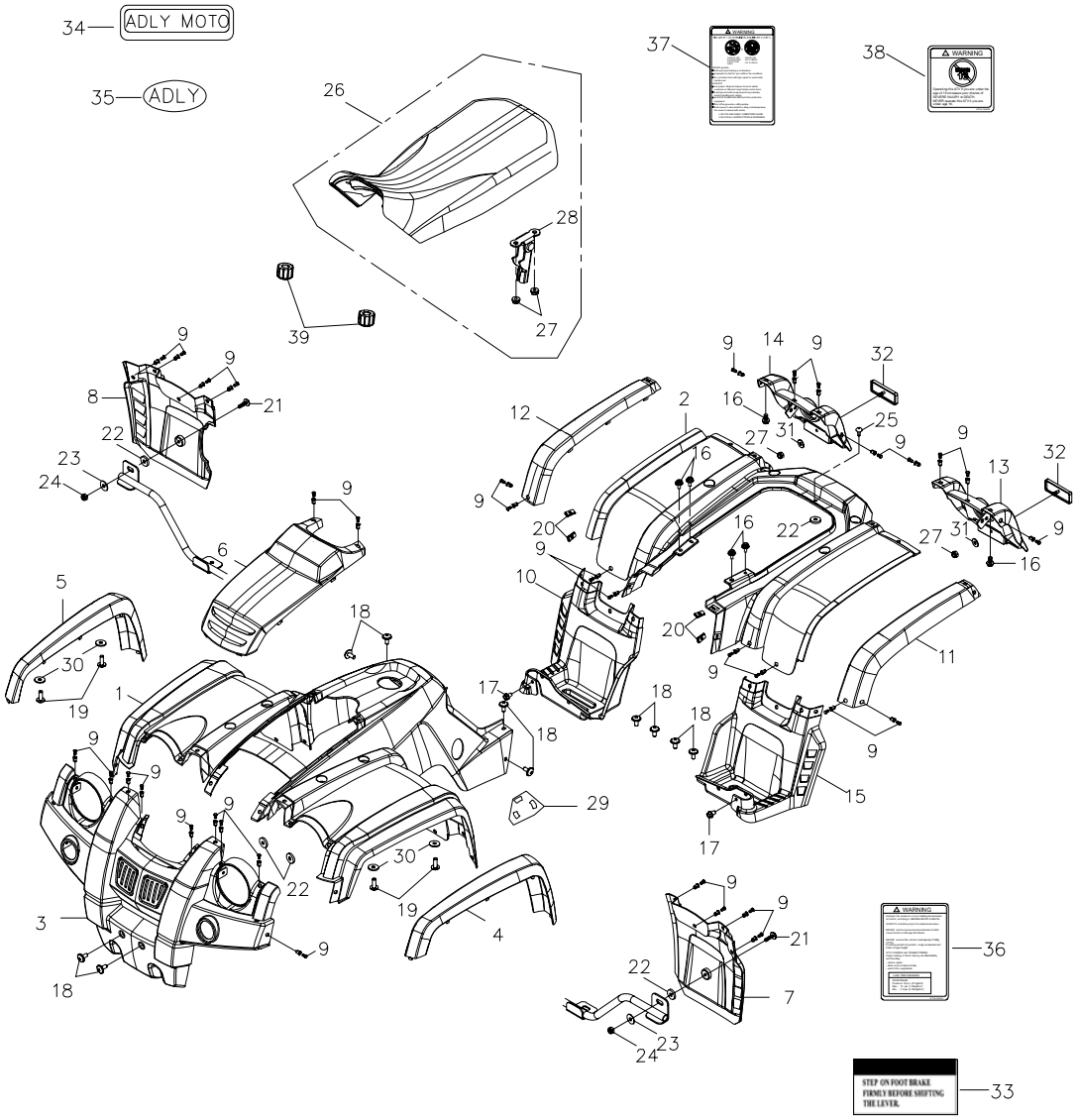

組件編號：237-16A　　車體蓋,座墊(92/61) BODY COVER,SEAT

| Item No. | Parts No. | Unit Q'ty | Parts Name | | |
|---|---|---|---|---|---|
| 項次 | 部品番號 | 用量 | 零件名稱 | | |
| 1 | 64301-223-000 | 1 | FRONT COVER | | |
| 2 | 83400-223-000 | 1 | REAR COVER | | |
| 3 | 50107-223-000 | 1 | BUMPER COVER | | |
| 4 | 64223-223-000 | 1 | F.FRONT VISOR | | |
| 5 | 64303-223-000 | 1 | R.FRONT VISOR | | |
| 6 | 64302-223-000 | 1 | FRONT VISOR | | |
| 7 | 61100-223-000 | 1 | L.FRONT FENDER | | |
| 8 | 61101-223-000 | 1 | R.FRONT FENDER | | |
| 9 | 90663-179-000 | 36 | PLASTIC BOLT | | |
| 10 | 64312-223-000 | 1 | R. FLOOR PANEL | | |
| 11 | 83600-223-000 | 1 | LEFT REAR COVER | | |
| 12 | 83500-223-000 | 1 | RIGHT REAR COVER | | |
| 13 | 80115-223-000 | 1 | L.REAR FENDER | | |
| 14 | 80116-223-000 | 1 | R. REAR FENDER | | |
| 15 | 64313-223-000 | 1 | L. FLOOR PANEL | | |
| 16 | 92000-06014-10K | 6 | HEX BOLT | 6*14 | |
| 17 | 96000-06015-10G | 2 | HEX WASHER FACE BOLT | 6*15 | |
| 18 | 93800-06015S | 6 | PAN PHILLIPS BOLT | 6*15 | |
| 19 | 93903-05012 | 4 | TAPPING SCREW TRUSS HEAD PHILLI | PS | 5*12 |
| 20 | 90344-0600A | 4 | U PLATE NUT | 6mm | |
| 21 | 93800-06020S | 2 | PAN PHILPS BOLT | 6*20 | |
| 22 | 94102-145-000 | 5 | RUBBER WASHER | | |
| 23 | 94101-0618020 | 2 | PLAIN WASHER | 6*18*2 | |
| 24 | 90350-06000 | 2 | NYLON NUT | 6mm | |
| 25 | 93701-06012G | 1 | PAN FLAT HEAD PHILLIPS BOLT | 6*12 | |
| 26 | 77200-223-000 | 1 | SEAT ASS'Y | | |
| 27 | 94050-06000 | 4 | HEX FLANGE NUT | 6mm | |
| 28 | 77201-169-000 | 1 | SEAT LATCH | | |
| 29 | 87728-197-000 | 1 | INDICATOR STICKER | | |
| 30 | 94101-0514010 | 4 | PLAIN WASHER | 5*14*1 | |

**BODY COVER,SEAT**

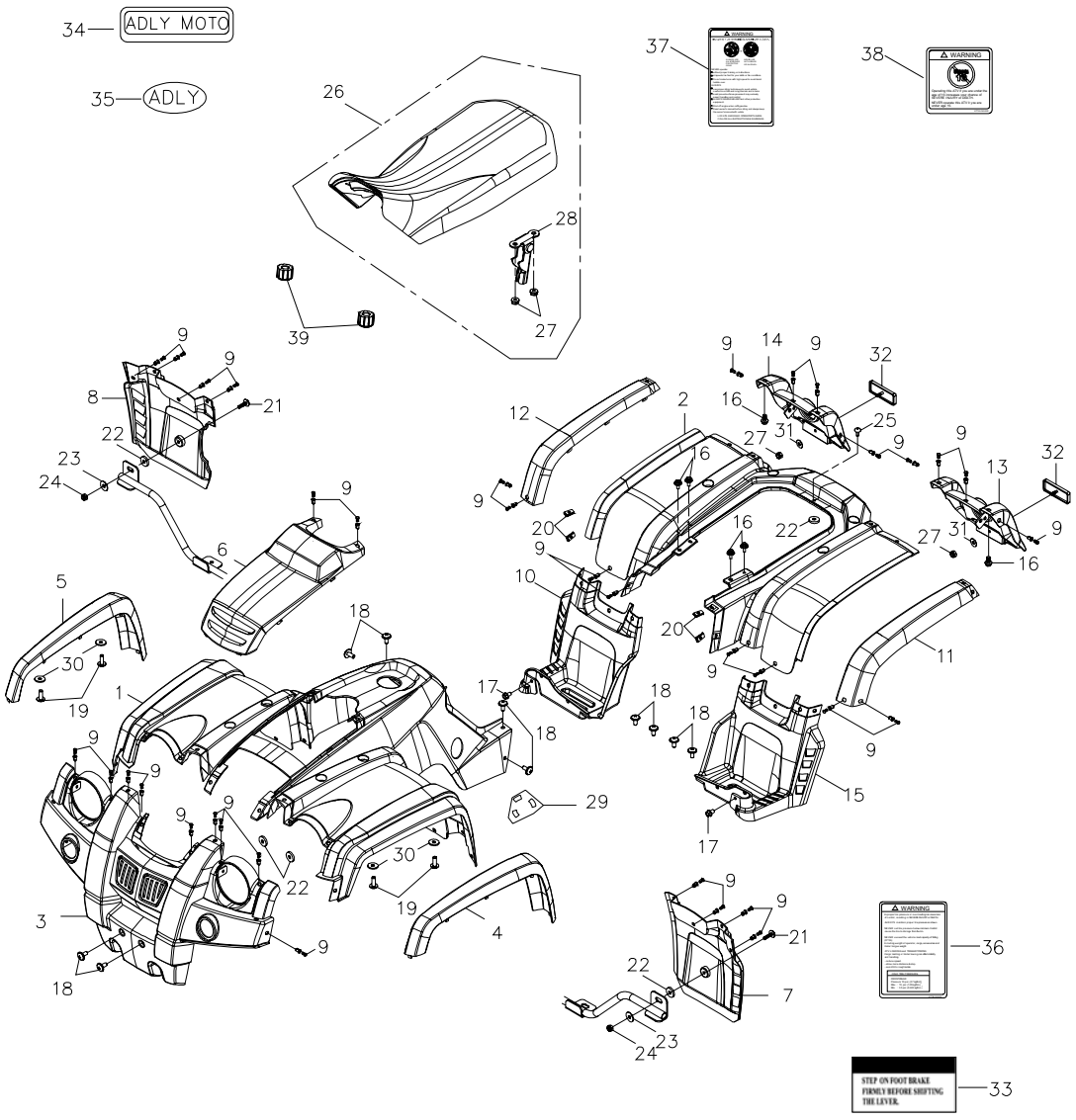

組件 編號：237-16A　　車體蓋,座墊(92/61) BODY COVER,SEAT

| Item No. 項次 | Parts No. 部品番號 | Unit Q'ty 用量 | Parts Name 零件名稱 | |
|---|---|---|---|---|
| 31 | 94101-0615010 | 2 | PLAIN WASHER | 6.5*15*1 |
| 32 | 33741-133-000 | 2 | REFLECTOR (E-MARK,SAE) RED | JUTE9605紅色 |
| 33 | 87747-197-00C | 1 | WARNING STICKER | |
| 34 | 87700-888-0BA | 1 | ADLY MOTO STICKER | 2/台 |
| 35 | 87700-888-00Z | 1 | ADLY STICKER | |
| 36 | 87756-169-00A | 1 | WARNING LABEL(TIRE INFLATION) | |
| 37 | 87758-169-00A | 1 | WARNING LABLE(INJURE) | |
| 38 | 87759-169-000 | 1 | WARNING LABLE(16 YEARS OLD AND | UNDER) |
| 39 | 77212-169-000 | 2 | RUBBER | |
| 40 | 87700-228-000 | 1 | STICKER ASS'Y | |

**FUEL TANK**

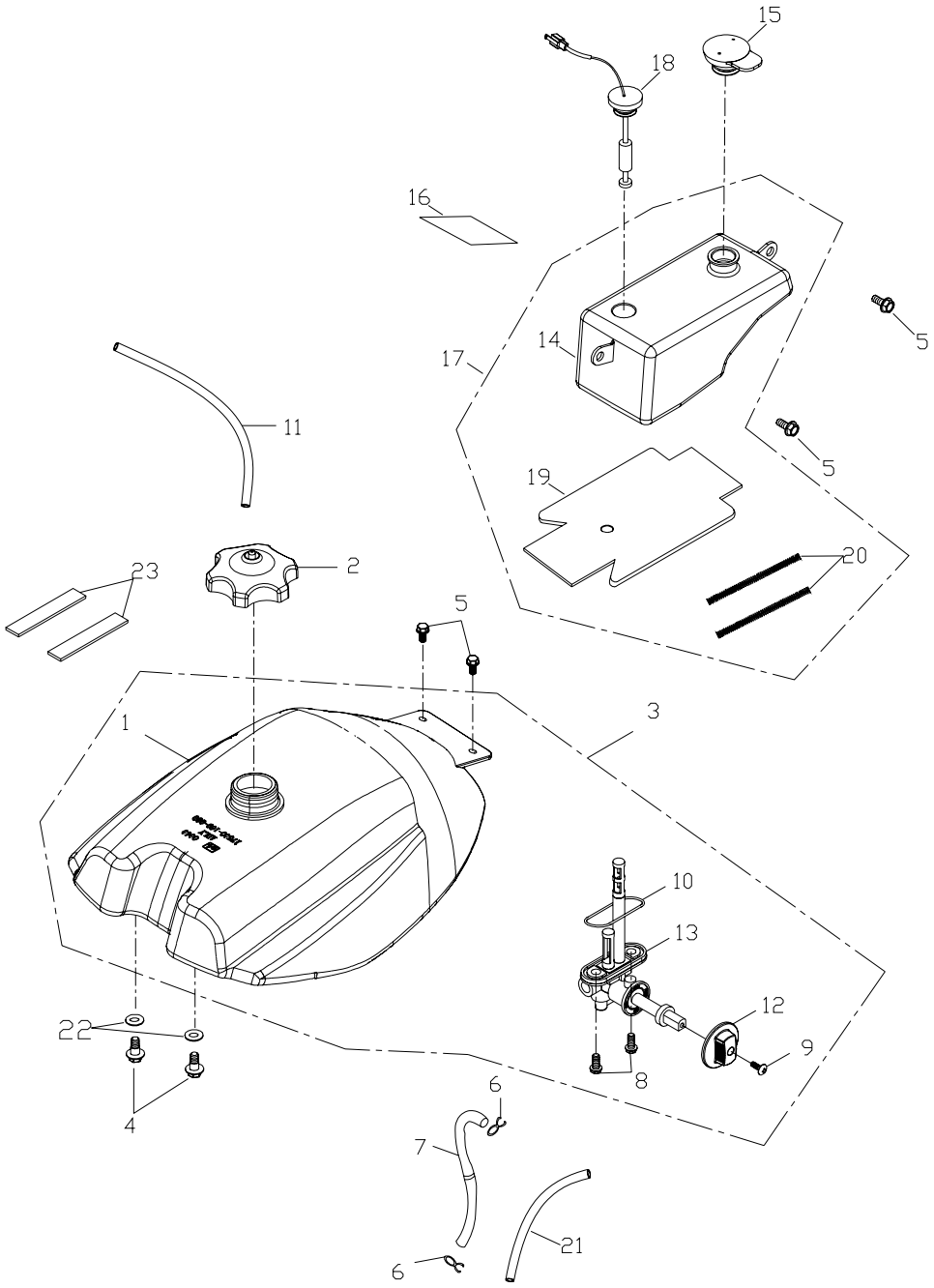

組件 編號：237-17A　　油箱(92/61) FUEL TANK

| Item No. 項次 | Parts No. 部品番號 | Unit Q'ty 用量 | Parts Name 零件名稱 | |
|---|---|---|---|---|
| 1 | 17500-169-001 | 1 | FUEL TANK COMP | #NAME? |
| 2 | 17620-169-00B | 1 | FUEL CAP ASS'Y | |
| 3 | 17511-197-001 | 1 | FUEL TANK ASS'Y | |
| 4 | 90111-08008-12G | 2 | LADDER BOLT | |
| 5 | 92006-06014-10G | 4 | HEX WASHER FACE BOLT | 6*14 |
| 6 | 94510-08000 | 2 | CLIP | 8*0.8 |
| 7 | 94400-0408400 | 1 | TUBE | 4.5*8*400 |
| 8 | 96000-06014-08 | 2 | HEX WASHER FACE BOLT | 6*14 |
| 9 | 93500-04012 | 1 | PAN PHILLIPS BOLT | 4*12 |
| 10 | 16951-169-000 | 1 | FUEL CUP RING | |
| 11 | 94400-0408355 | 1 | BREATHER HOSE | 4.5*8*355 |
| 12 | 17622-145-000 | 1 | FUEL VALVE KNOB | |
| 13 | 16953-197-000 | 1 | FUEL CAP BODY | |
| 14 | 55100-154-00A | 1 | OIL TANK | 機油計量器 |
| 15 | 55105-145-000 | 1 | OIL TANK CAP | |
| 16 | 87723-116-000 | 1 | DECAL, WARNING BATTERY PROPOSITION | |
| 17 | 55110-145-000 | 1 | OIL TANK COMP (W.ISOLATOR, SPRING, TUBE) | |
| 18 | 35410-116-000 | 1 | OIL LEVEL GAUGE | |
| 19 | 55101-145-001 | 1 | OIL TANK ISOLATION GASKET | 0.1+5mm/200℃ |
| 20 | 55106-145-000 | 2 | CONSTRICT SPRING | 0.4*250mm |
| 21 | 94402-0911300 | 1 | TUBE COVER | 9*11*300 |
| 22 | 94102-1022020 | 2 | RUBBER WASHER | 10*20*2 |
| 23 | 17505-145-000 | 2 | SPONGE PAD | 15*100*4 |

**SWING ARM SUB ASS'Y**

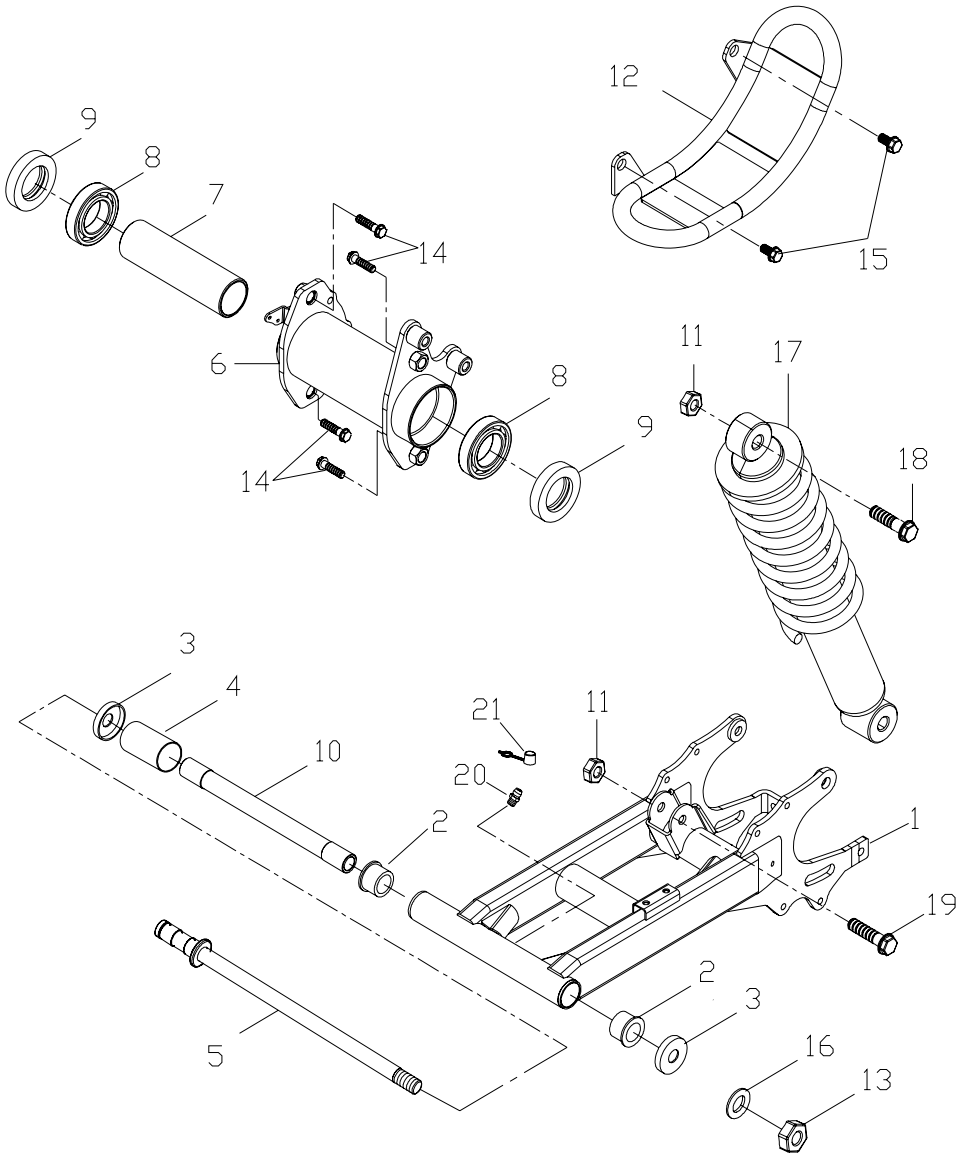

組件編號：237-18　　後叉總成 SWING ARM SUB ASS'Y

| Item No. 項次 | Parts No. 部品番號 | Unit Q'ty 用量 | Parts Name 零件名稱 | |
|---|---|---|---|---|
| 1 | 52100-197-002 | 1 | SWING ARM SUB ASS'Y | |
| 2 | 52103-145-000 | 2 | BUSH | |
| 3 | 52144-145-000 | 2 | SWING ARM SEAL COVER | |
| 4 | 52101-197-000 | 1 | RUBBER SLEEVE | L=45 |
| 5 | 52116-169-000 | 1 | SWING ARM BOLT | |
| 6 | 52200-197-000 | 1 | REAR AXLE HOLDER | |
| 7 | 42313-197-000 | 1 | REAR BRAKE PANEL SPACER | |
| 8 | 96100-6007ZZ | 2 | RADIAL BALL BEARING | |
| 9 | 96500-42628 | 2 | O-SEAL | 42*62*8 |
| 10 | 52115-169-000 | 1 | COLLAR | |
| 11 | 90350-12000G | 2 | NYLON INSERT LOCK NUT | M12 |
| 12 | 40520-197-000 | 1 | DRIVE CHAIN UNDER HALF CASE | |
| 13 | 90350-14000G | 1 | NYLON NUT | M14 |
| 14 | 96000-12027-17L | 4 | HEX WASHER FACE BOLT | 12*27 |
| 15 | 96000-08012-12G | 2 | HEX WASHER FACE BOLT | 8*12 |
| 16 | 94105-1529030 | 1 | PLAIN WASHER | 15*29*3 |
| 17 | 52400-231-001 | 1 | REAR CUSHION ASS'Y | |
| 18 | 96000-12065-17G | 1 | HEX FLANGE BOLT | M12*65 |
| 19 | 96000-12050-14G | 1 | HEX FLANGE BOLT | 12*50 |
| 20 | 96501-06000 | 1 | GREASE VALEVE | 6mm X 5牙 |
| 21 | 96502-06000 | 1 | GREASE VALEVE CAP | 6mm |

**WHEEL FRONT&REAR**

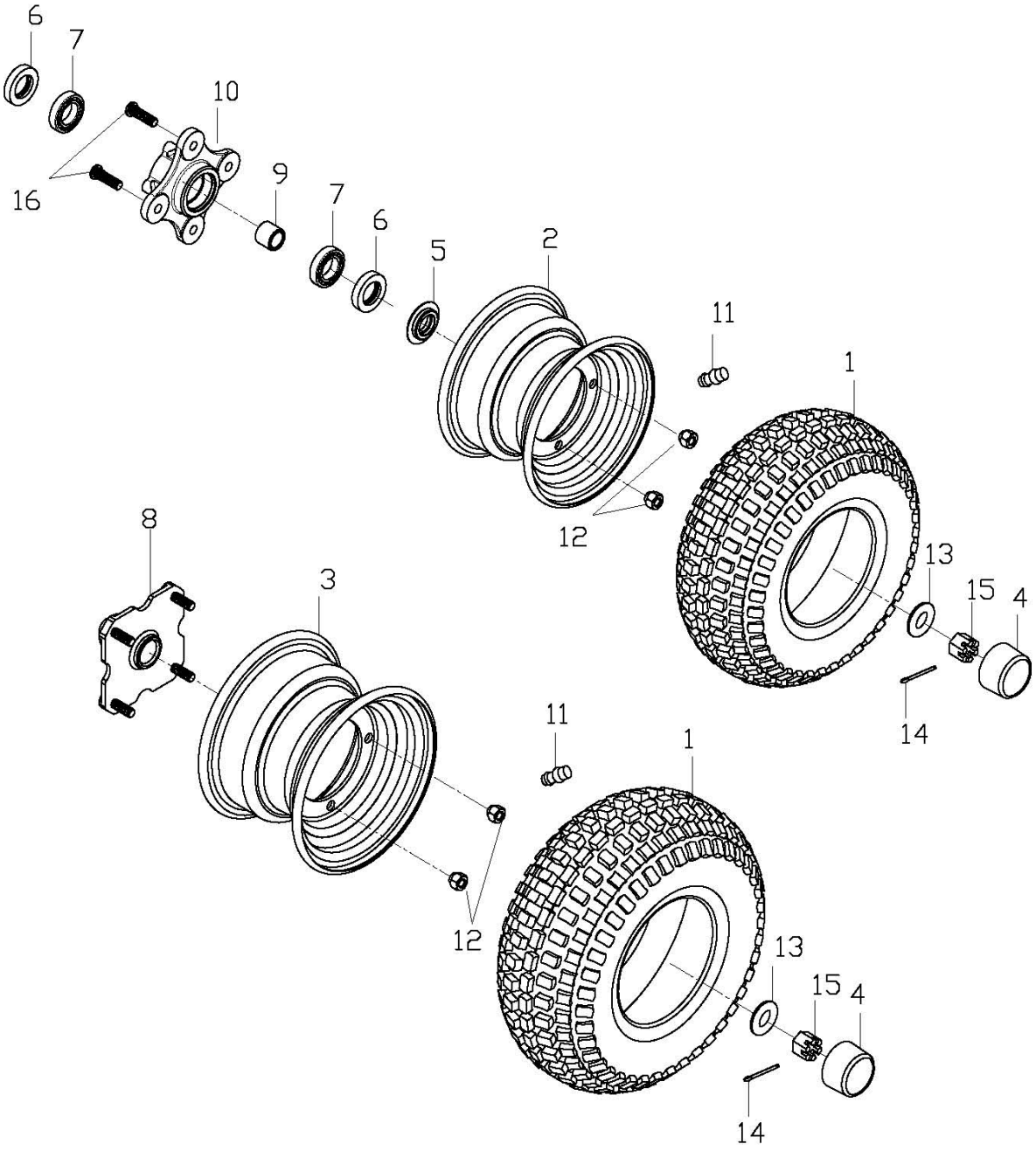

組件 編號：237-19A　　前,後輪(92/61) WHEEL FRONT&REAR

| Item No. 項次 | Parts No. 部品番號 | Unit Q'ty 用量 | Parts Name 零件名稱 | |
|---|---|---|---|---|
| 1 | 42711-223-000 | 4 | FRONT TIRE | AT21*7-10 K572 |
| 2 | 42701-231-000 | 2 | FRONT TIRE | 10*5.5 |
| 3 | 42801-231-000 | 2 | REAR RIM | 10*5.5 |
| 4 | 42814-145-000 | 4 | RUBBER COVER | |
| 5 | 42707-169-000 | 2 | COLLAR | |
| 6 | 96500-29435 | 4 | OIL SEAL | 29.3*43.6*4.5 |
| 7 | 96100-6004ZZ | 4 | RADIAL BALL BEARING | 6004ZZCM/2A-T |
| 8 | 42037-169-000 | 2 | REAR SHAFT HUB | |
| 9 | 42705-169-000 | 2 | COLLAR | |
| 10 | 42036-169-000 | 2 | FRONT SHAFT HUB | |
| 11 | 42616-145-000 | 4 | AIR NOZZLE | |
| 12 | 94001-10015B | 8 | WHEEL NUT | M10*15 |
| 13 | 94101-1840045 | 4 | PLATE WASHER | 18*40*4.5 |
| 14 | 94201-03320 | 4 | COTTER PIN | 3*32 |
| 15 | 94051-18000B | 4 | SCOTCH NUT | M18 |
| 16 | 96005-10035C | 8 | HUB STUD BOLT | 10*35 |

**FRONT BRAKE**

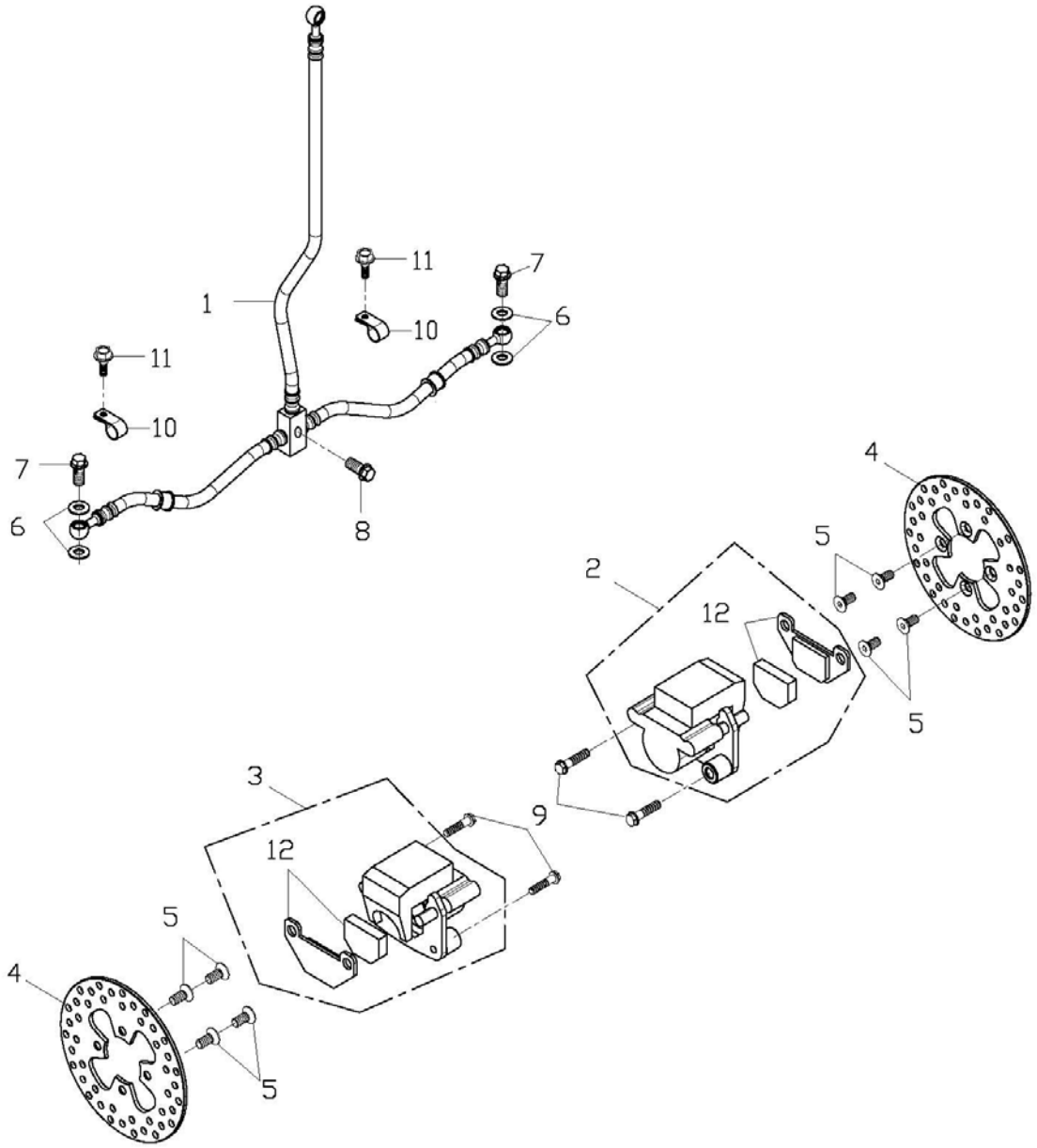

組件 編號：237-20A　　前剎車系統(92/61) FRONT BRAKE

| Item No. 項次 | Parts No. 部品番號 | Unit Q'ty 用量 | Parts Name 零件名稱 | |
|---|---|---|---|---|
| 1 | 45450-197-00A | 1 | BACK HOSE | |
| 2 | 45000-169-000 | 1 | R. FRONT BRAKE CALIPER ASS'Y | |
| 3 | 45200-169-000 | 1 | L. FRONT BRAKE CALIPER ASS'Y | |
| 4 | 45015-169-000 | 2 | BRAKE DISC | 直徑164 |
| 5 | 93901-08018G | 8 | HAX SOCKET BOLT | M8*18 |
| 6 | 94103-1015010 | 4 | COPPER PLAIN WASHER | 10.2*15*1 |
| 7 | 45456-107-000 | 2 | BRAKE HOSE HEX BOLT | 10*22 |
| 8 | 96000-06020-10G | 1 | HEX FLANGE BOLT | M6*20 |
| 9 | 96000-0802012GL | 4 | HEX FLANGE BOLT | M8*20 |
| 10 | 45452-197-000 | 2 | BRAKE HOSE CLAMP | |
| 11 | 96000-06012-10G | 2 | HEX WASHER FACE BOLT | 6*12 |
| 12 | 45120-169-000 | 2 | FRONT BRAKE PAD KIT | |

**REAR BRAKE**

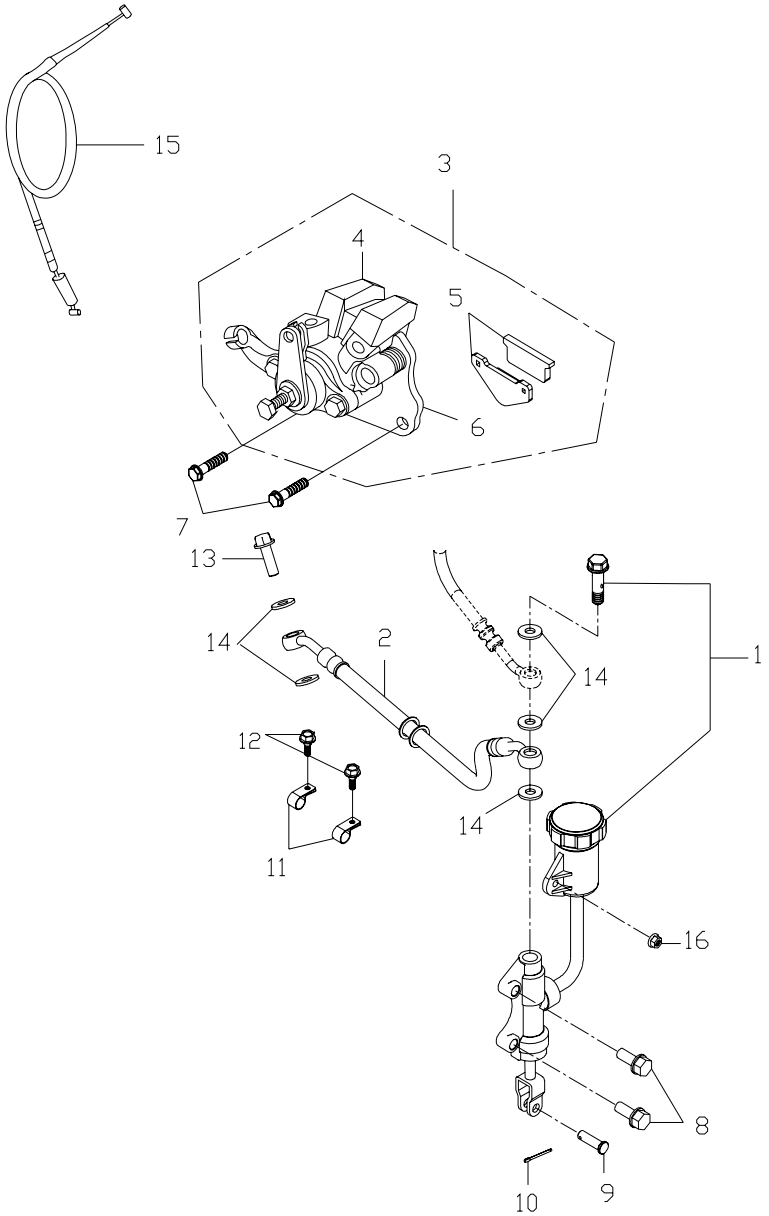

組件編號：237-21A　　後剎車系統 REAR BRAKE

| Item No. 項次 | Parts No. 部品番號 | Unit Q'ty 用量 | Parts Name 零件名稱 | |
|---|---|---|---|---|
| 1 | 43500-197-00A | 1 | REAR MASTER CYLINDER ASS'Y | |
| 2 | 43460-197-000 | 1 | REAR BRAKE HOSE | |
| 3 | 43000-197-00C | 1 | REAR BRAKE CALIPER ASS'Y | |
| 4 | 45010-197-00A | 1 | CALIPER BODY | |
| 5 | 43120-169-00B | 1 | BRAKE PAD KIT | |
| 6 | 43001-197-000 | 1 | SUPPORT BRACKET | |
| 7 | 96000-1003214GL | 2 | HEX WASHER FACE BOLT | 10*32(加耐落膠 |
| 8 | 96000-08012-10 | 2 | HEX WASHER FACE BOLT | 8*12 |
| 9 | 45521-168-000 | 1 | PIN | 7mm |
| 10 | 94201-02200 | 1 | COTTER PIN | 2*20 |
| 11 | 45452-197-000 | 2 | BRAKE HOSE CLAMP | |
| 12 | 96000-06012-10G | 2 | HEX WASHER FACE BOLT | 6*12 |
| 13 | 45456-107-000 | 2 | BRAKE HOSE FIX BOLT | 10*22 |
| 14 | 94103-1015010 | 5 | COPPER PLAIN WASHER | 10.2*15*1 |
| 15 | 43470-197-000 | 1 | FOOT BRAKE CABLE | |
| 16 | 94050-06000 | 1 | HEX FLANGE NUT | 6mm |

**HANDLE BAR**

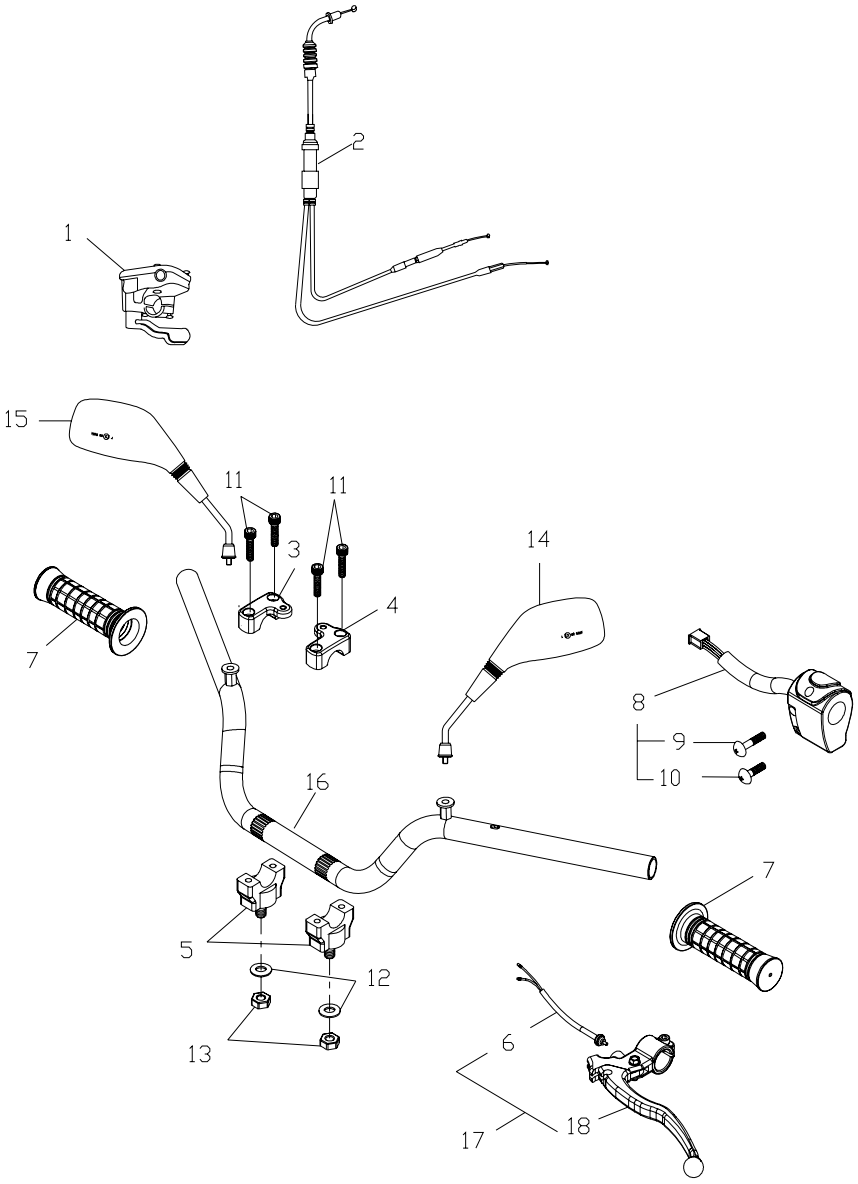

組件編號：237-22A　　手把(92/61) HANDLE BAR

| Item No.<br>項次 | Parts No.<br>部品番號 | Unit Q'ty<br>用量 | Parts Name<br>零件名稱 | |
|---|---|---|---|---|
| 1 | 53170-156-000 | 1 | THROTTLE LEVER ASS'Y | |
| 2 | 17910-231-000 | 1 | THROTTLE CABLE | |
| 3 | 53103-145-000 | 1 | RIGHT HANDLE BAR CLAMP | |
| 4 | 53102-145-000 | 1 | LEFT HANDLE BAR CLAMP | |
| 5 | 53101-154-000 | 2 | HANDLE BAR BOTTOM CLAMP | |
| 6 | 35345-145-000 | 1 | L.BRAKE SWITCH WIRE | |
| 7 | 53165-179-000 | 2 | HANDLE GRIP | |
| 8 | 35200-156-000 | 1 | L.HANDLE SWITCH ASS'Y | |
| 9 | 93500-05035 | 1 | PAN PHILLIPS BOLT | 5*35 |
| 10 | 93500-05025 | 1 | PAN PHILLIPS BOLT | 5*25 |
| 11 | 91000-06025 | 4 | HEX SOCKET BOLT | 6*25 |
| 12 | 94105-1022025G | 2 | PLAIN WASHER | 10*22*2.5 |
| 13 | 90350-10000G | 2 | NYLON NUT | M10*P1.25 |
| 14 | 88120-145-000 | 1 | L.REAR VIEW MIRROR | |
| 15 | 88110-145-000 | 1 | R.REAR VIEW MIRROR | |
| 16 | 53100-223-000 | 1 | HANDLE BAR | |
| 17 | 53179-197-000 | 1 | LEFT LEVER ASS'Y | |
| 18 | 53178-197-000 | 1 | LEFT LEVER | |

**REAR WHEEL AXLE,CHAIN**

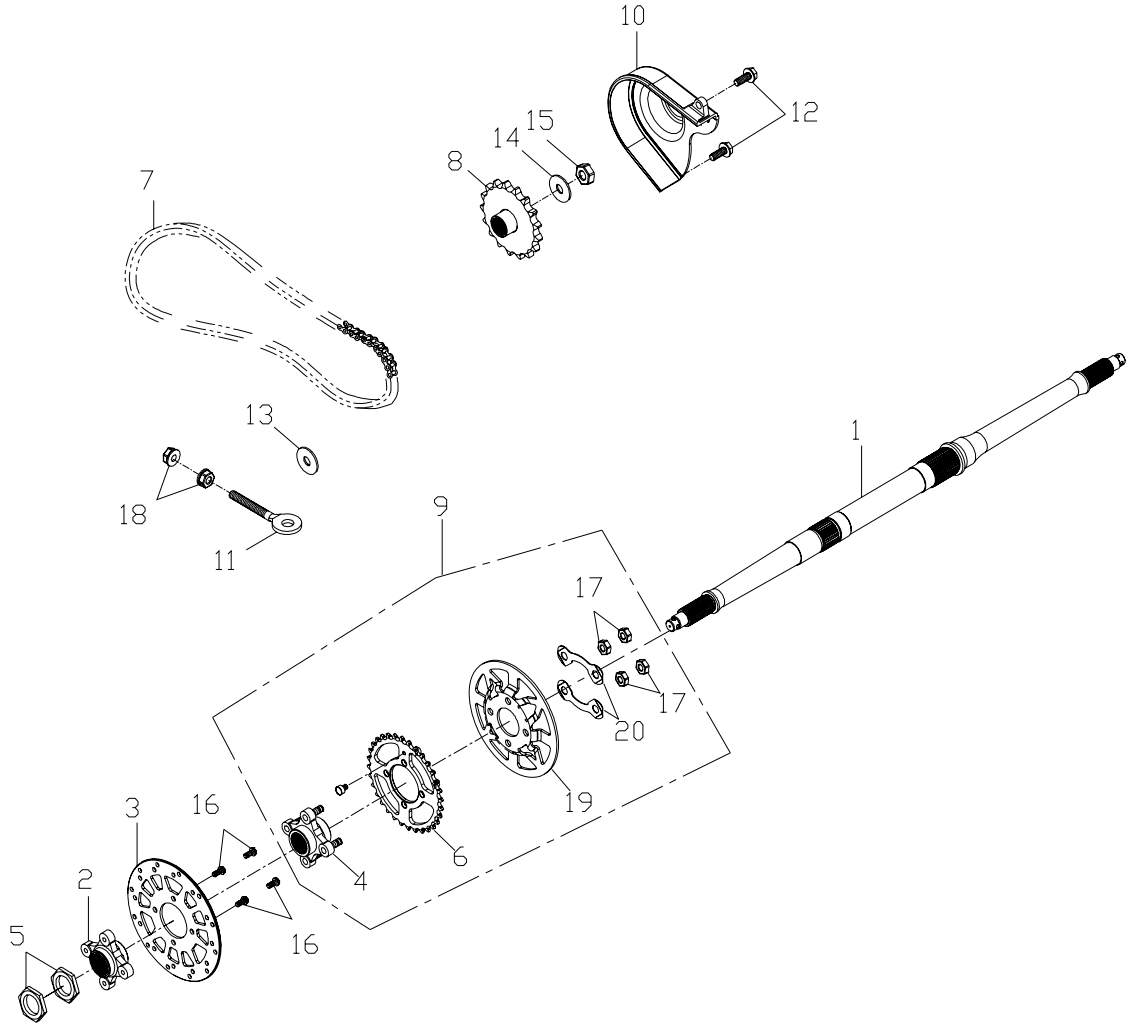

組件 編號：237-23A　　後輪軸,鏈條(92/61) REAR WHEEL AXLE,CHAIN

| Item No.<br>項次 | Parts No.<br>部 品 番 號 | Unit Q'ty<br>用量 | Parts Name<br>零 件 名 稱 | |
|---|---|---|---|---|
| 1 | 42301-197-001 | 1 | REAR AXLE | 840mm |
| 2 | 42106-197-001 | 1 | REAR BRAKE PANEL CONNECTOR | |
| 3 | 45015-197-00A | 1 | BRAKE DISC | |
| 4 | 42610-197-001 | 1 | REAR SPROCKET FLANGE | |
| 5 | 94001-33140G | 2 | HEX NUT | M33*14*P1.5 |
| 6 | 41201-231-00A | 1 | REAR SPROCKET | 40t |
| 7 | 40530-231-000 | 1 | DRIVE CHAIN | 428SH 106目 |
| 8 | 23801-201-000 | 1 | DRIVE SPROCKET ASS'Y | 20T |
| 9 | 42600-231-00A | 1 | REAR SPROCKET | |
| 10 | 40511-197-000 | 1 | FRONT CHAIN COVER | |
| 11 | 40543-145-001 | 1 | DRIVE CHAIN ADJUSTER | 8 MM |
| 12 | 96000-06020-10G | 2 | HEX FLANGE BOLT | M6*20 |
| 13 | 94101-1225050 | 1 | PLAIN WASHER | 12*25*5 |
| 14 | 94101-1529030 | 1 | PLAIN WASHER | 15*29*3 |
| 15 | 90350-14000 | 1 | NYLON NUT | 14mm |
| 16 | 45016-146-000 | 4 | REAR BRAKE BOLT | |
| 17 | 94050-10000 | 4 | HEX FLANGE NUT WITH SERRATION | 10mm |
| 18 | 94050-08000 | 2 | HEX FLANGE NUT | 8mm |
| 19 | 40516-197-000 | 1 | CHAIN GUIDE | |
| 20 | 41206-197-000 | 2 | FIXED WASHER | |

## STEERING

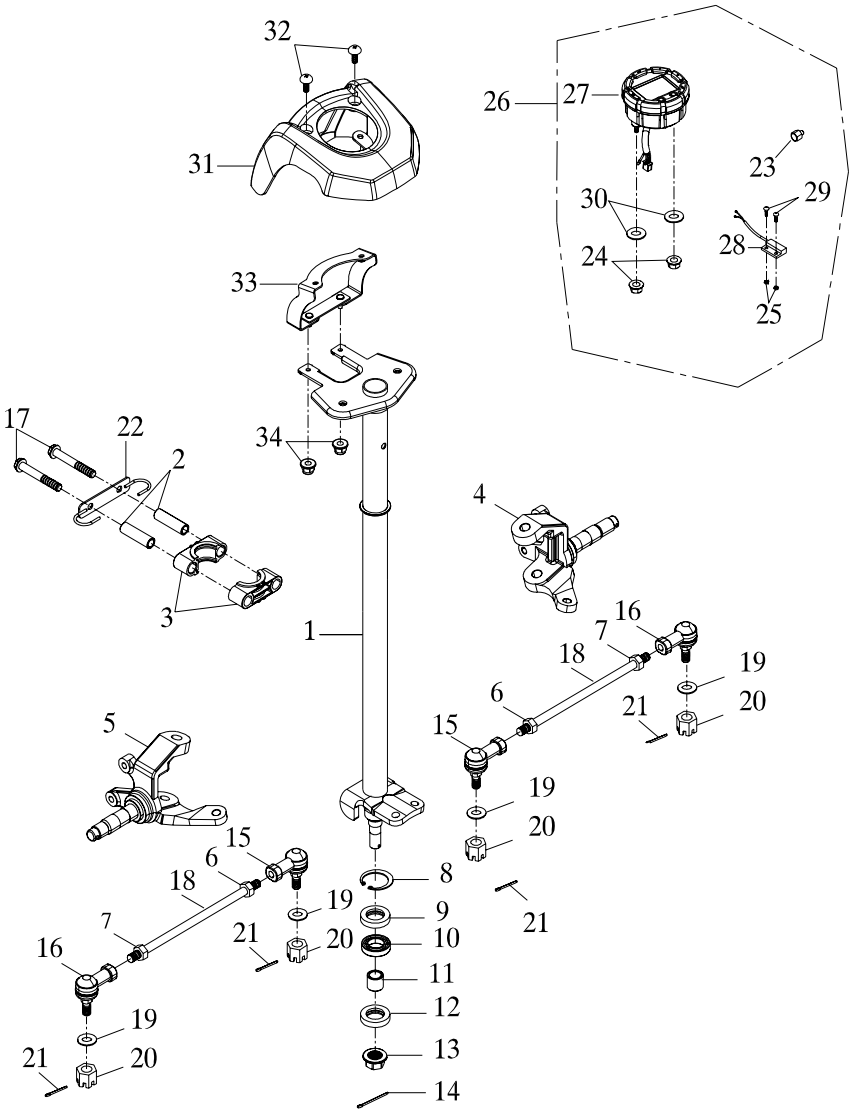

32
31
26
27
23
30
29
28
24
25
33
17
22
2
34
4
3
1
16
7
18
19
6
21
20
15
5
19
20
15
6
18
8
19
9
7
21
20
10
16
11
12
19
13
21
20
14
21

組件 編號：237-24A　　轉向系統(92/61) STEERING

| Item No. 項次 | Parts No. 部品番號 | Unit Q'ty 用量 | Parts Name 零件名稱 | |
|---|---|---|---|---|
| 1 | 51109-231-000 | 1 | STEERING SHAFT ASS'Y | |
| 2 | 51114-169-000 | 2 | HOLDER SPACER COLLER | |
| 3 | 51113-169-000 | 2 | STEERING SHAFT HOLDER | |
| 4 | 44520-169-000 | 1 | RIGHT KNUCKLE ASS'Y | |
| 5 | 44510-169-000 | 1 | LEFT KNUCKLE ASS'Y | |
| 6 | 94001-12000LC | 2 | HEX NUT | M12 |
| 7 | 94001-12000B | 2 | HEX NUT | M12 |
| 8 | 94512-4000R | 1 | INTERNAL CIR CLIP | RTW-40 |
| 9 | 96500-274008 | 1 | OIL SEAL | 27*40*8 |
| 10 | 96100-6203ZZ | 1 | RADIAL BALL BEARING | 6203ZZCS05/2A |
| 11 | 51120-169-000 | 1 | STEERING SHAFT BUSHING | |
| 12 | 96500-22357 | 1 | OIL SEAL | 22*35*7 |
| 13 | 90350-14000G | 1 | NYLON NUT | M14 |
| 14 | 94201-03450 | 1 | COTTER PIN | 3*45 |
| 15 | 44511-169-000 | 2 | BALL JOINT,LEFT THREAD | |
| 16 | 44521-169-000 | 2 | BALL JOINT,RIGHT THREAD | |
| 17 | 96000-10065-14G | 2 | HEX FLANGE BOLT | M10*65 |
| 18 | 91001-12235B | 1 | ROD | M12*235 |
| 19 | 94101-1020020 | 4 | PLAIN WASHER | 10*20*2 |
| 20 | 90350-10000G | 4 | NYLON NUT | M10*P1.25 |
| 21 | 94201-03320 | 4 | COTTER PIN | 3*32 |
| 22 | 45451-197-000 | 1 | BRACKET | |
| 23 | 37217-226-000 | 1 | MAGNET | 圓型 |
| 24 | 94050-06000 | 2 | HEX FLANGE NUT | 6mm |
| 25 | 94001-03000 | 2 | HEX NUT | 3mm |
| 26 | 37200-231-000 | 1 | SPEEDOMETER ASS'Y | |
| 27 | 37220-231-000 | 1 | SPEEDOMETER BODY | |
| 28 | 37218-226-000 | 1 | SENSOR | |
| 29 | 93500-03010 | 2 | PAN PHILLIPS BOLT | 3*10 |
| 30 | 94101-0615010 | 2 | PLAIN WASHER | 6.5*15*1 |

**STEERING**

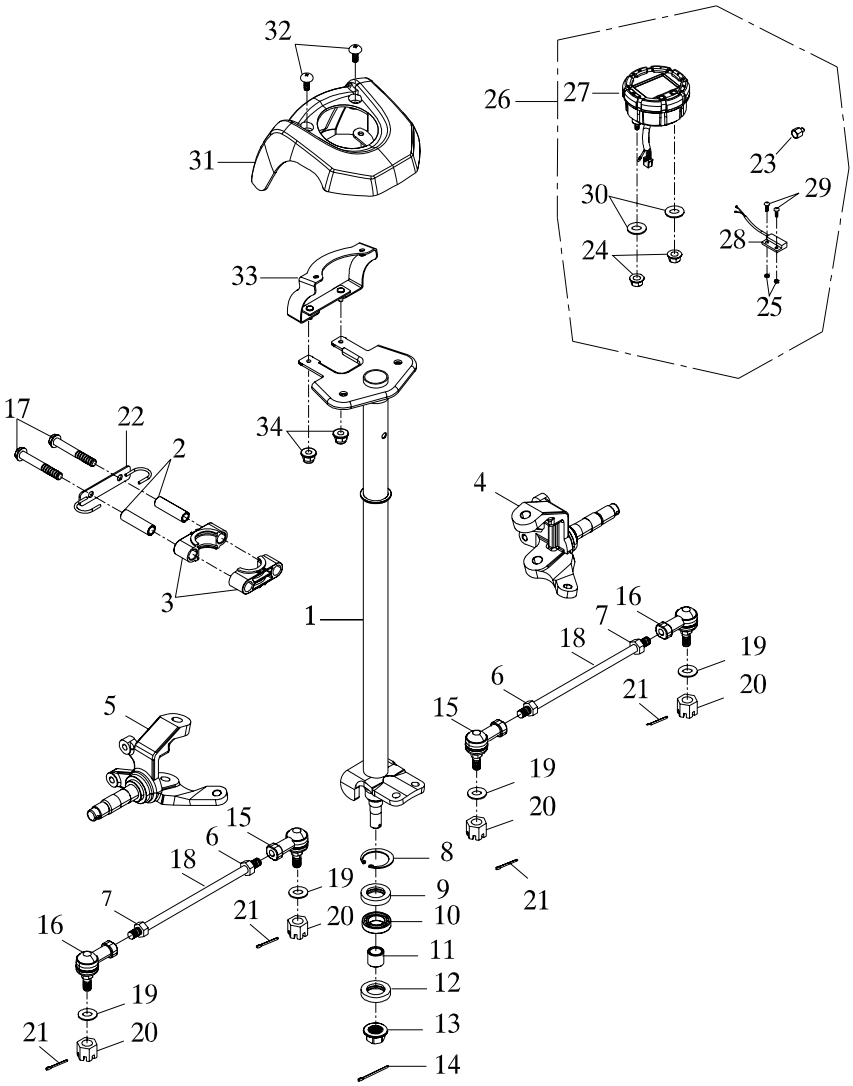
32
31
26
27
23
30
29
28
24
25
33
34
17
22
2
3
4
1
16
7
18
19
6
21
20
15
5
8
9
10
11
12
13
14

組件 編號：237-24A　　轉向系統(92/61) STEERING

| Item No. 項次 | Parts No. 部 品 番 號 | Unit Q'ty 用量 | Parts Name 零 件 名 稱 | |
|---|---|---|---|---|
| 31 | 64211-223-000 | 1 | SPEEDOMETER COVER | |
| 32 | 93701-06012G | 2 | PAN FLAT HEAD PHILLIPS BOLT | 6*12 |
| 33 | 37212-223-000 | 1 | SPEEDOMETER HOLDER | |
| 34 | 90351-06000 | 2 | HEX FLANGE NYLON NUT | M6 |

## ELECTRICAL PARTS

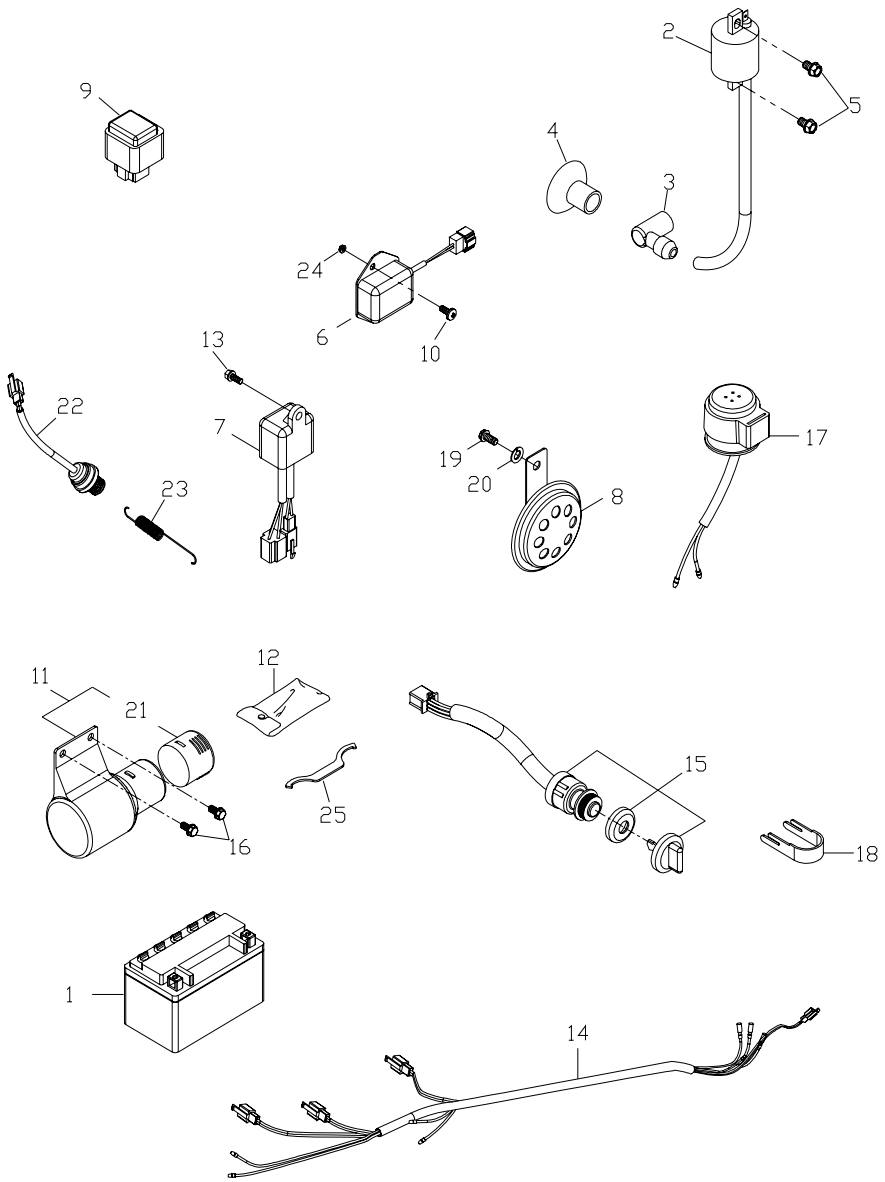

組件 編號：237-25B　　電裝品(92/61) ELECTRICAL PARTS

| Item No. 項次 | Parts No. 部品番號 | Unit Q'ty 用量 | Parts Name 零件名稱 | |
|---|---|---|---|---|
| 1 | 31500-166-000 | 1 | BATTERY | 12V |
| 2 | 30510-110-000 | 1 | HIGH TENSION COIL | L=300 |
| 3 | 30700-101-001 | 1 | SPARK PLUG CAP | 10KΩ |
| 4 | 30605-116-000 | 1 | RUBBER CAP | |
| 5 | 96000-06020-10 | 2 | HEX WASHER FACE BOLT | 6*20 |
| 6 | 31600-110-000 | 1 | REGULATER RECTIFIER | |
| 7 | 30410-116-000 | 1 | C.D.I UNIT | |
| 8 | 38110-101-001 | 1 | HORN (E-MARK) | 12V NO0037 |
| 9 | 38501-105-001 | 1 | STARTING RELAY | |
| 10 | 93500-05012 | 1 | PAN PHILLIPS BOLT | 5*12 |
| 11 | 50121-169-000 | 1 | TOOL CASE | |
| 12 | 50120-101-000 | 1 | TOOL BAG | |
| 13 | 93500-06015 | 1 | PAN PHILLIPS BOLT | 6*15 |
| 14 | 32100-237-00A | 1 | MAIN WIRE HARNESS | |
| 15 | 35100-145-00B | 1 | MAIN SWITCH ASS'Y | |
| 16 | 90111-08015-14G | 2 | LADDER BOLT | 8*15 |
| 17 | 38301-223-000 | 1 | FLASHER RELAY | 標準 12V |
| 18 | 35102-145-000 | 1 | MAIN SWITCH BRACKET | |
| 19 | 96000-06010-10 | 3 | HEX WASHER FACE BOLT | 6*10 |
| 20 | 94111-0612015 | 1 | SPRING WASHER | 6*12*1.5 |
| 21 | 50122-169-000 | 1 | TOOL CASE CAP | |
| 22 | 35350-108-000 | 1 | STOP SWITCH ASS'Y | |
| 23 | 35357-197-000 | 1 | STOP SWITCH SPRING | |
| 24 | 94050-05000 | 1 | HEX FLANGE NUT WITH SERRATION | 5mm |
| 25 | 51420-231-000 | 1 | CUSHION ADJUST | |
| 26 | 90669-101-00B | 1 | RUBBER STRAP | 7.5*280m/m |

**SIGNAL LIGHT,TALL LIGHT**

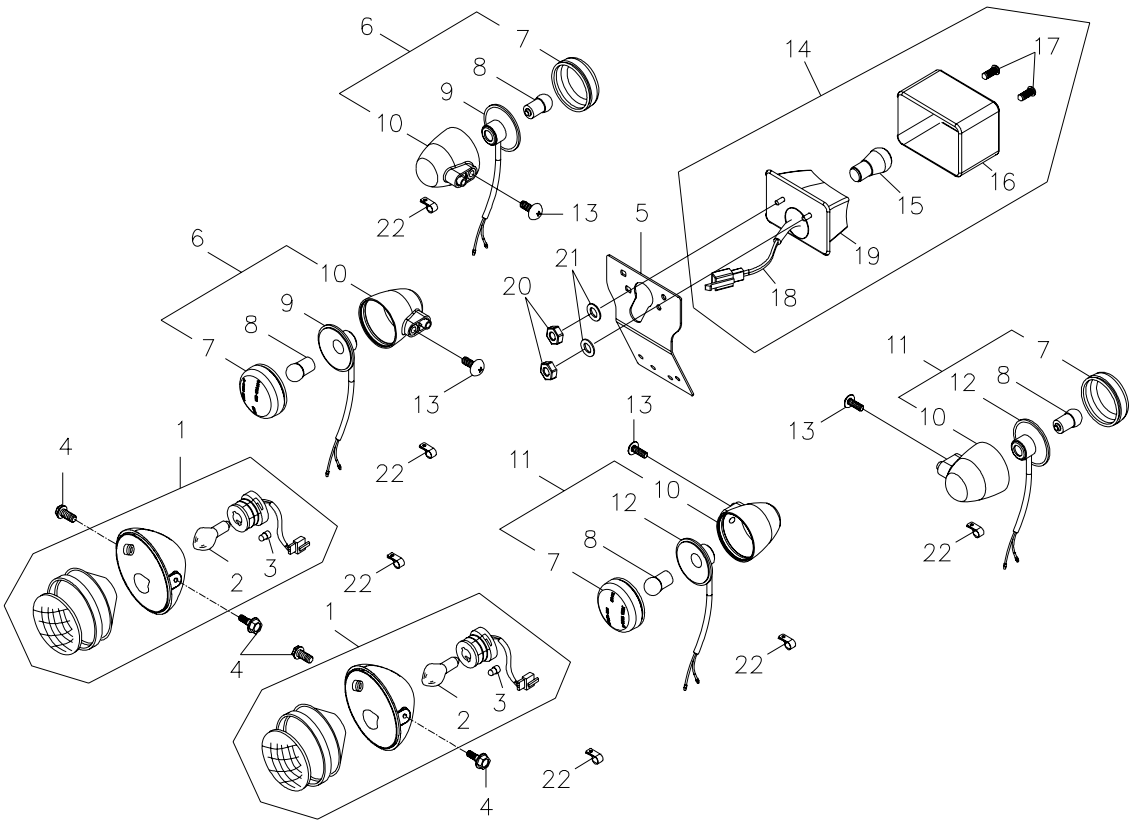

組件編號：237-26A　　方向燈,後燈(92/61) SIGNAL LIGHT,TALL LIGHT

| Item No. | Parts No. | Unit Q'ty | Parts Name | |
|---|---|---|---|---|
| 項次 | 部品番號 | 用量 | 零件名稱 | |
| 1 | 33100-169-000 | 2 | HEAD LAMP | |
| 2 | 34901-169-000 | 2 | HEAD LIGHT BULB | 12V35W |
| 3 | 34909-169-000 | 2 | POSITION LAMP | 12V5W |
| 4 | 90111-05015-08G | 4 | LADDER BOLT | M5*15 |
| 5 | 50357-197-000 | 1 | TAIL LIGHT MOUNTING BRACKET | |
| 6 | 33400-226-00A | 2 | R.SIGNAL ASS'Y (E-MARK) | 21W |
| 7 | 33410-197-000 | 4 | SIGNAL COVER | |
| 8 | 34905-226-000 | 4 | BULB (E-MARK) | 12V/21W |
| 9 | 33425-226-000 | 2 | SIGNAL BULB SOCKET | |
| 10 | 33451-223-000 | 4 | SIGNAL SOCKET | |
| 11 | 33450-226-00A | 2 | L.SIGNAL ASS'Y(E-MARK) | 21W |
| 12 | 33435-226-000 | 2 | L.SIGBAL BULB SOCKET | |
| 13 | 93701-06012G | 4 | PAN FLAT HEAD PHILLIPS BOLT | 6*12 |
| 14 | 33700-223-000 | 1 | TAIL LIGHT ASS'Y (E-MARK) | |
| 15 | 34906-128-000 | 1 | TAIL LIGHT BULB | 12V 21/5W |
| 16 | 33702-223-000 | 1 | TAIL LIGHT LENS | |
| 17 | 93905-03538 | 2 | PAN PHILLIPS SCREW | 3.5*38 |
| 18 | 33712-169-000 | 1 | TAIL LIGHT WIRE | |
| 19 | 33711-128-001 | 1 | REAR LIGHT SOCKET | |
| 20 | 90350-06000G | 2 | NYLON NUT | M6 |
| 21 | 94101-0618020 | 2 | PLAIN WASHER | 6*18*2 |
| 22 | 11352-145-000 | 6 | CABLE CLAMP | |